Cassette Car Radio 90DC612/00/80
90DC632/00

Service
Service
Service

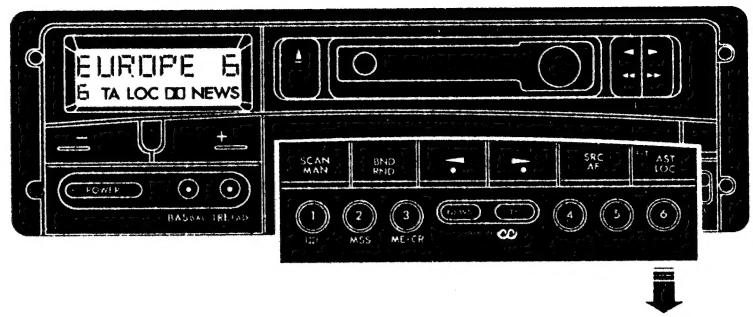

Service Manual

12 V

DC612

For repair information of the Cassette deck see Service Manual of Auto Cassette Deck CDS-36PS (4822 725 24650).

DC632

For repair information of the Cassette deck see Service Manual of Auto Cassette Deck CDS-101XPF.

Table of contents **Page**

1. Technical Specifications 1
2. Connections and Controls 2
3. Service Hints 2a
4 Wiring Diagram ..... 3 - 4
5. Electrical Architecture 5
6. Main Board ..... Circuit Diagram ..... 6 - 12
   Component Layout ..... 13 - 14
7. LCD Driver Board 15
8. Detachable Keyboard 16
9. D²B Board 17
10. Main Set Exploded View and Partslist 18
11. Electrical Partslist ..... 19 - 24

Published by Philips Car Systems Printed in The Netherlands

© Copyright reserved Subject to modification

4822 725 23445

PCS 77 534

PHILIPS

Technical Specifications
General

Power Supply	:	10.8 - 15.6V
Quiescent Current	:	1mA (Set switch off)
Fuse	:	10A

Radio

FM	:	87.5 - 108MHz, grid : 100kHz (manual/search)
LW	:	144 - 288kHz, grid : 1kHz (manual/search)
MW	:	531 - 1629kHz, grid : 9kHz (manual/search)
SW *)	:	5.85 - 6.25MHz, grid : 1kHz (manual/search)
IF	:	10.7MHz
Search Tuning Sensitivity	:	14 ± 4µV (AM)
	:	15 ± 5µV (FM)
Search Tuning Time	:	≤ 5 seconds (AM/FM)
α - 3dB	:	7 ± 3µV
Crosstalk	:	≥ 30dB
Signal Dependent Response	:	6 ± 1dB
Signal Dependent Stereo	:	100 - 200µV

Amplifier

Output Power (D=10%)	:	4x20W ± 1dB/4Ω
Loudness	:	Auto
Bass	:	23 ± 3dB at 60Hz
Treble	:	10 ± 2dB at 10kHz
Line out *)	:	500mV ± 2dB
Line in *)	:	100mV for 1W

Cassette Deck CDS-36PS and CDS101X (Auto Reverse)

Number of tracks	:	2 X 2
Tape speed	:	4.76 cm/sec. +3% - 1%
Wow and Flutter	:	≤ 0.3%
Fast wind	:	165 second (CDS 36PS)
	:	100 second (CDS-101XPF)

*) Applicable only for DC632 (see table)

ESD

WARNING

All IC's and many semiconductors are susceptible to electronic discharges (ESD). Careless handling during repair can reduce life drastically.
When repairing, make sure that you care connected to the same potential as the mass of the set via a wrist wrap with resistance. Keep components and tools also at this potential.

Version	DC612	DC632
CDCC		✓
DOLBY B		✓
MSS		✓
MoCr		✓

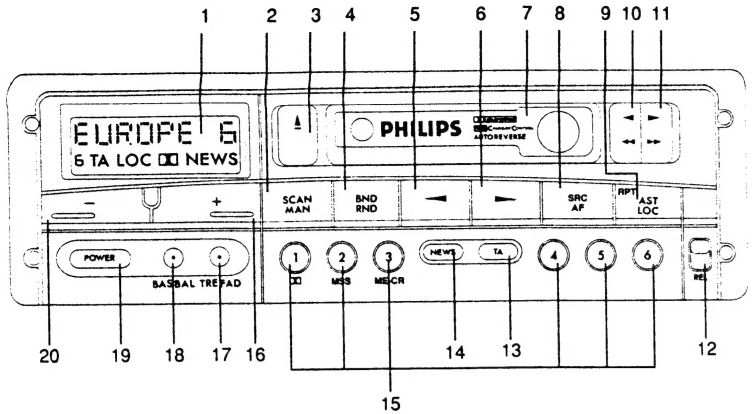

Controls

1	Liquid crystal Display	1704	13	Mute / TA *)	1057
2	Scan / Manual	1063	14	Loud	1054
3	Eject		15	Preset Button 1-6	
4	Band / Random *)	1062		P1 - Dolby B *)	
5	Search Down / Previous *)	1050		P2 - Music Search System *)	
6	Search Up / next *)	1061		P3 - Metal Chrome *)	
7	Cassette Compartment		16	+ Volume Up	1064
8	SRC *) / Alternate Frequencies	1056	17	Treble / Fader	1067
9	RPT/AST / Local	1060	18	Bass/ Balance	1066
10	FRW / FFW		19	Power on/off	1068
11	FFW / FRW		20	– Volume Down	1065
12	Release Knob				

*) Only applicable for DC632 (see table)

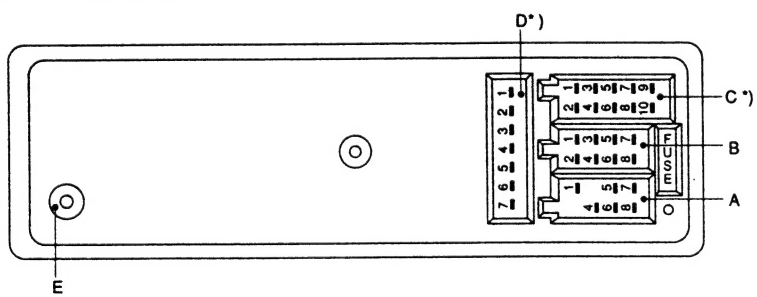

Connections

A1	: Telephone Mute	B1	: Rear Right +	C1	: D²B GND	D1	: Remote Plus
A4	: Permanent Plus	B2	: Rear Right Return -	C2	: D²B+	D2	: Booster Detect
A5	: Auto Antenna	B3	: Front Right +	C3	: D²B-	D3	: Line-out GND
A6	: External Illumination Plus	B4	: Front Right Return -	C4	: N.C.	D4	: Line-out FR
A7	: Ignition on-off	B5	: Front Left +	C5	: CDCC Supply	D5	: Line-out RR
A8	: Power GND	B6	: Front Left Return -	C6	: GND	D6	: Line-out FL
		B7	: Rear Left +	C7	: Switched +	D7	: Line-out RL
		B8	: Rear Left Return -	C8	: Line-In Right		
				C9	: Line-in Left	E	: Aerial Connection
				C10	: Line-in Gnd		

*) Block C and D only applicable for DC632 (see table)

Service Hints

Detachable Keyboard Unit

The Detachable Keyboard unit is part of the Car Radio. Hence it is necessary that the customer always bring the complete set (with detachable keyboard unit) when service is needed. This statement was also printed in the Instruction For Use.

Software

The software of the set is split into two parts: one in the main uP (item 7700) and the other in the 2nd uP (item 7702). Make sure that when changing uP, both the main and 2nd uP are software compatible.

Software compatibility can be verified by reading the 'checksum' of the main uP and 2nd uP. Please refer to the table below for information on the software release status of DC612/DC632.

DC612/DC632 Software Release Status

Item	7700 CE558	7702 C528
SW Release	R 2.0	R 2.0
Marking on IC	F4+AS-R2.0	F4+AS-R2.0
Description	P83CE558EFB/034	P83C528FFB/109
Checksum	4297	96B8
Service Code	4822 209 90075	4822 209 90074

A table stating the different checksum related to the software release and compatibility will also be issued regularly in service newsletters in case of changes.

To read the 'checksum' of microprocessor

Power on the set, press simultaneously the preset 1 and preset 6 keys. Two 4 digits number appear on the display :
first 4 digits : checksum of the main uP
second 4 digits : checksum of the 2nd uP
Set goes back to the normal mode after about 5 seconds. Power off and on will also reset the set to the normal mode.

General

For more information about the RDS-feature use the computerbased training course RDS, which is available at Philips Consumer Service. Contact Philips Consumer Service
I.S.C. Training
Building SBP6
P.O. Box 218
5600 MD Eindhoven
The Netherlands
Tel : 31-40-736294
Fax : 31-40-733553
Telex : NLMEVAB

PART B : WIRING DIAGRAM

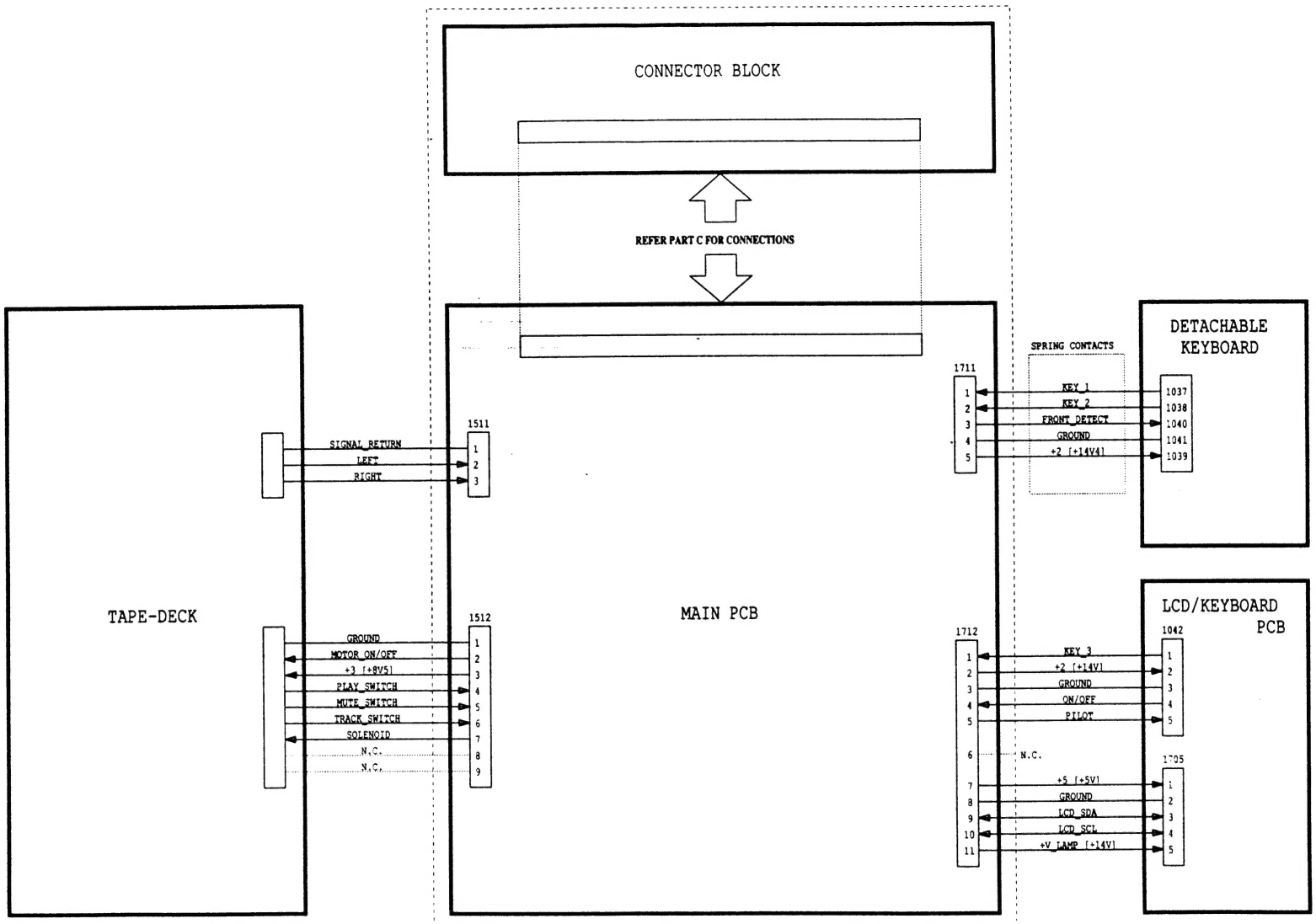

MAIN PCB ASSEMBLY

PART C : CONNECTOR BLOCK

4X20W CONNECTOR BLOCK

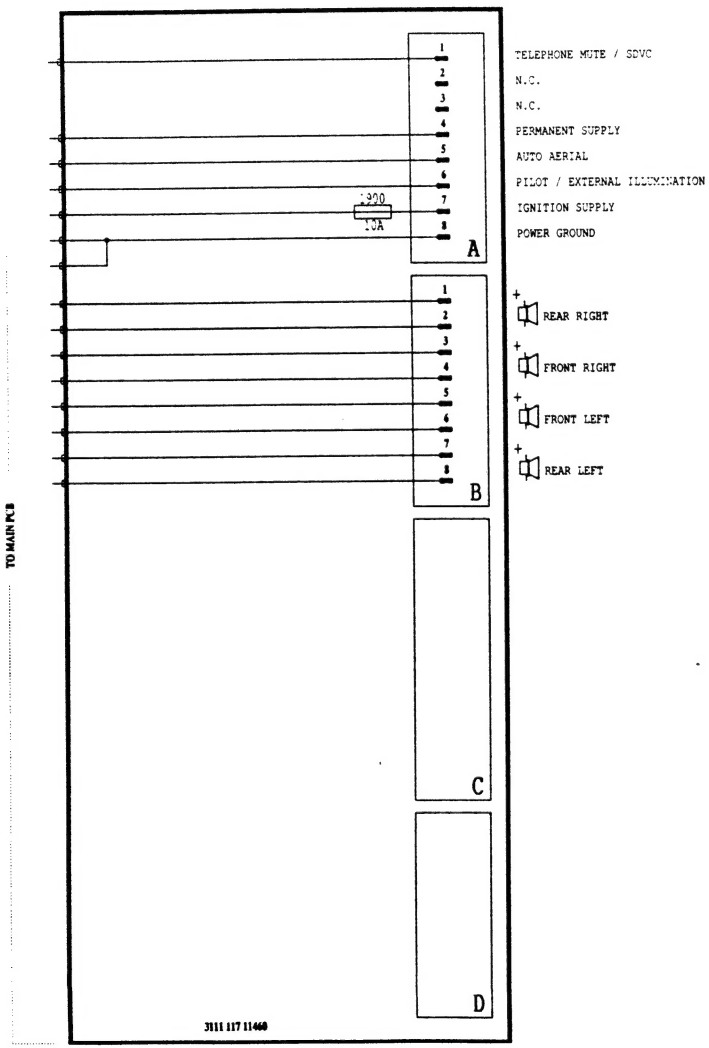

FOR DC612/00, DC612/00

4X20W CONNECTOR BLOCK

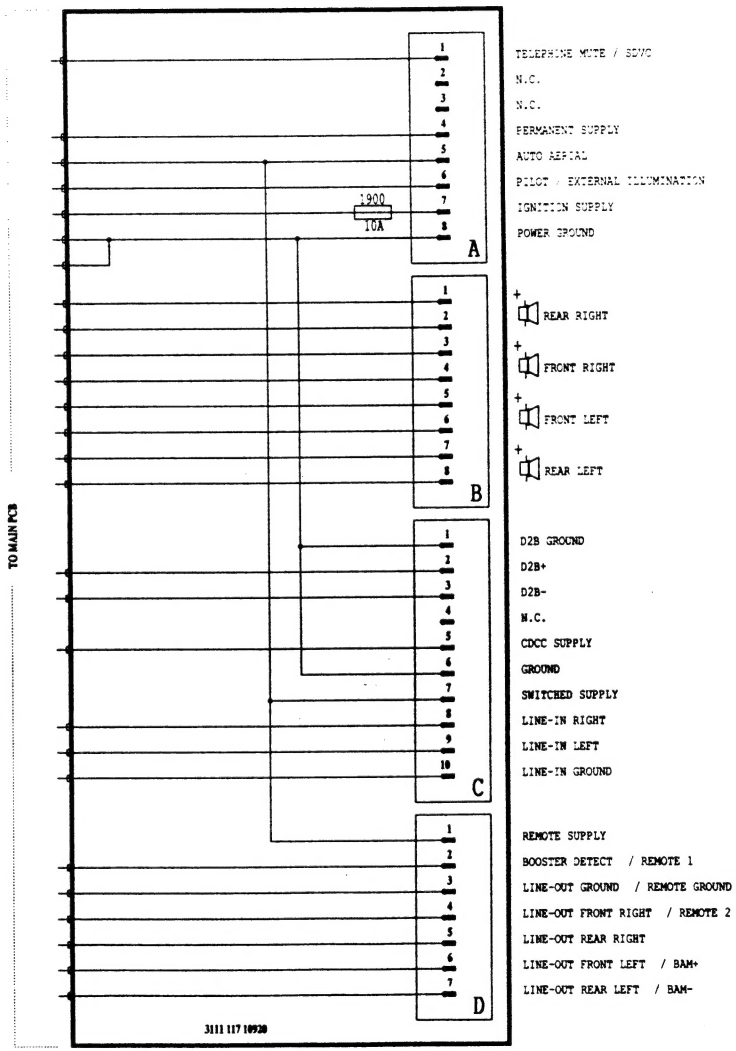

FOR DC632/00

PART A : ELECTRICAL ARCHITECTURE

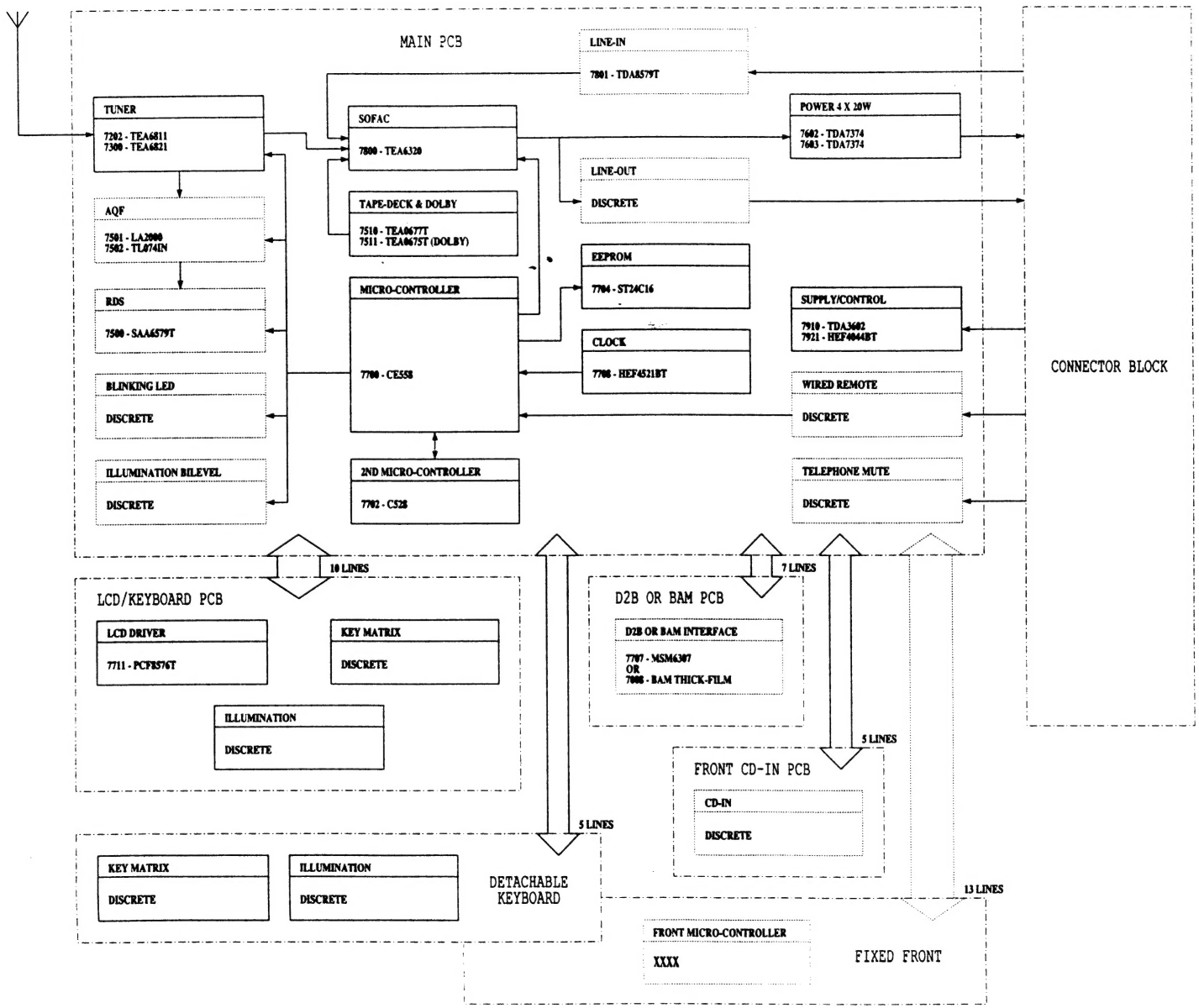

PART 1 : TUNER IC91 (MAIN PCB)

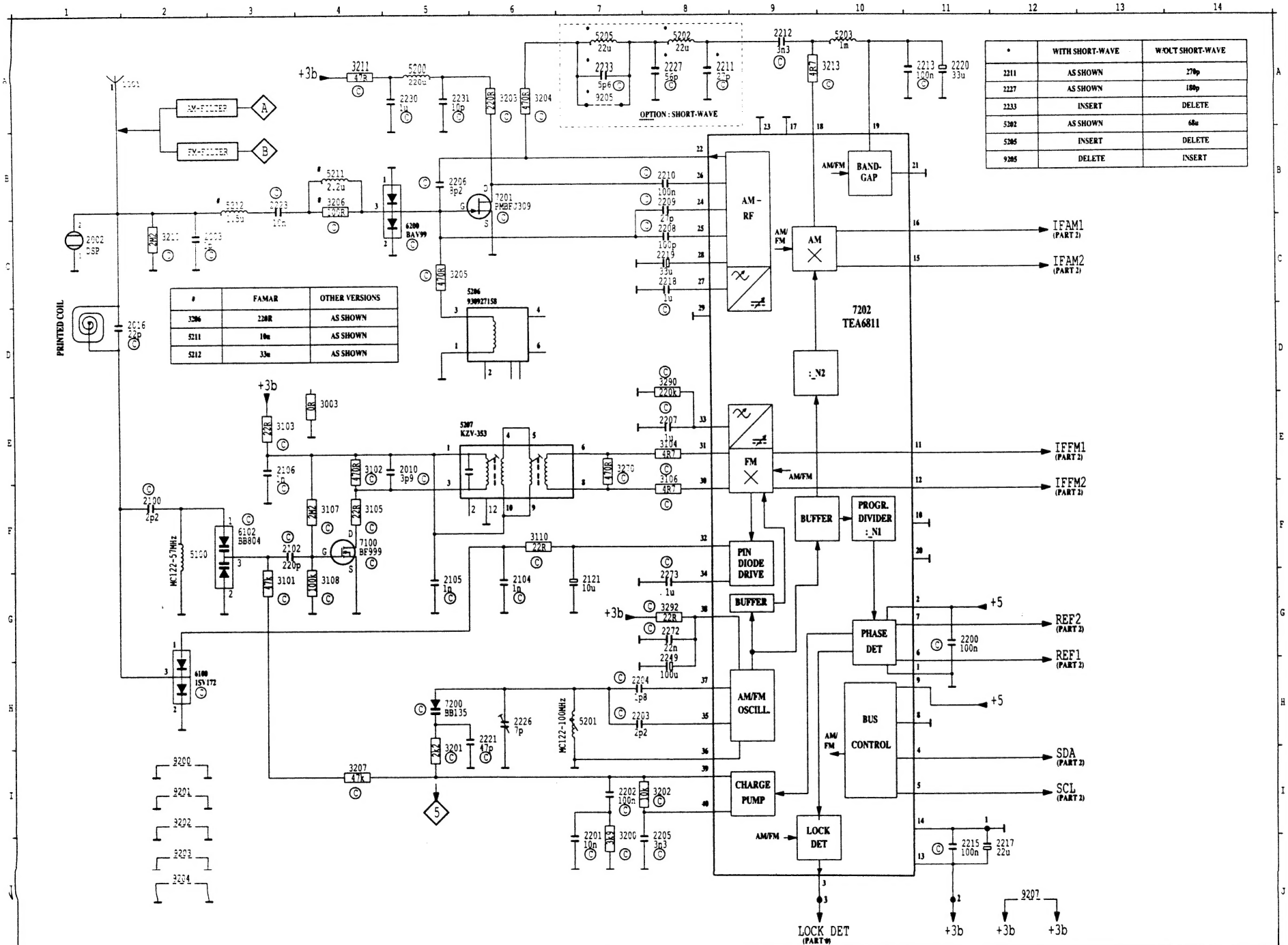

#	FAMAR	OTHER VERSIONS
3206	220R	AS SHOWN
5211	10u	AS SHOWN
5212	33u	AS SHOWN

*	WITH SHORT-WAVE	W/OUT SHORT-WAVE
2211	AS SHOWN	270p
2227	AS SHOWN	180p
2233	INSERT	DELETE
5202	AS SHOWN	68u
5205	INSERT	DELETE
9205	DELETE	INSERT

1001 A 2
2002 C 1
2003 C 3
2010 E 5
2016 D 2
2100 F 2
2102 F 3
2104 G 6
2105 G 5
2106 E 3
2121 G 7
2200 G 11
2201 J 7
2202 I 7
2203 H 7
2204 H 7
2205 J 8
2206 B 5
2207 E 8
2208 C 8
2209 B 8
2210 B 8
2211 A 8
2212 A 9
2213 A 11
2215 J 11
2217 J 12
2218 C 8
2219 C 8
2220 A 11
2221 H 6
2223 H 3
2226 H 6
2227 A 8
2230 A 5
2231 A 5
2233 A 7
2249 H 8
2272 G 8
2273 G 8
3003 E 4
3101 G 3
3102 E 4
3103 E 3
3104 E 8
3105 F 4
3106 E 8
3107 F 4
3108 G 4
3110 F 6
3200 J 7
3201 I 5
3202 I 8
3203 A 6
3204 A 6
3205 C 5
3206 B 4
3207 I 4
3210 C 2
3211 A 4
3213 A10
3270 E 7
3290 D 8
3292 G 8
5100 F 2
5200 A 5
5201 H 7
5202 A 8
5203 A10
5205 A 7
5206 C 5
5207 E 5
5211 B 4
5212 B 3
6100 H 2
6102 F 3
6200 C 5
7100 F 4
7200 H 5
7201 B 6
7202 D10
9200 I 2
9201 I 2
9202 I 2
9203 J 2
9204 J 2
9205 A 7
9207 J12

PART 2 : TUNER IC91 (MAIN PCB)

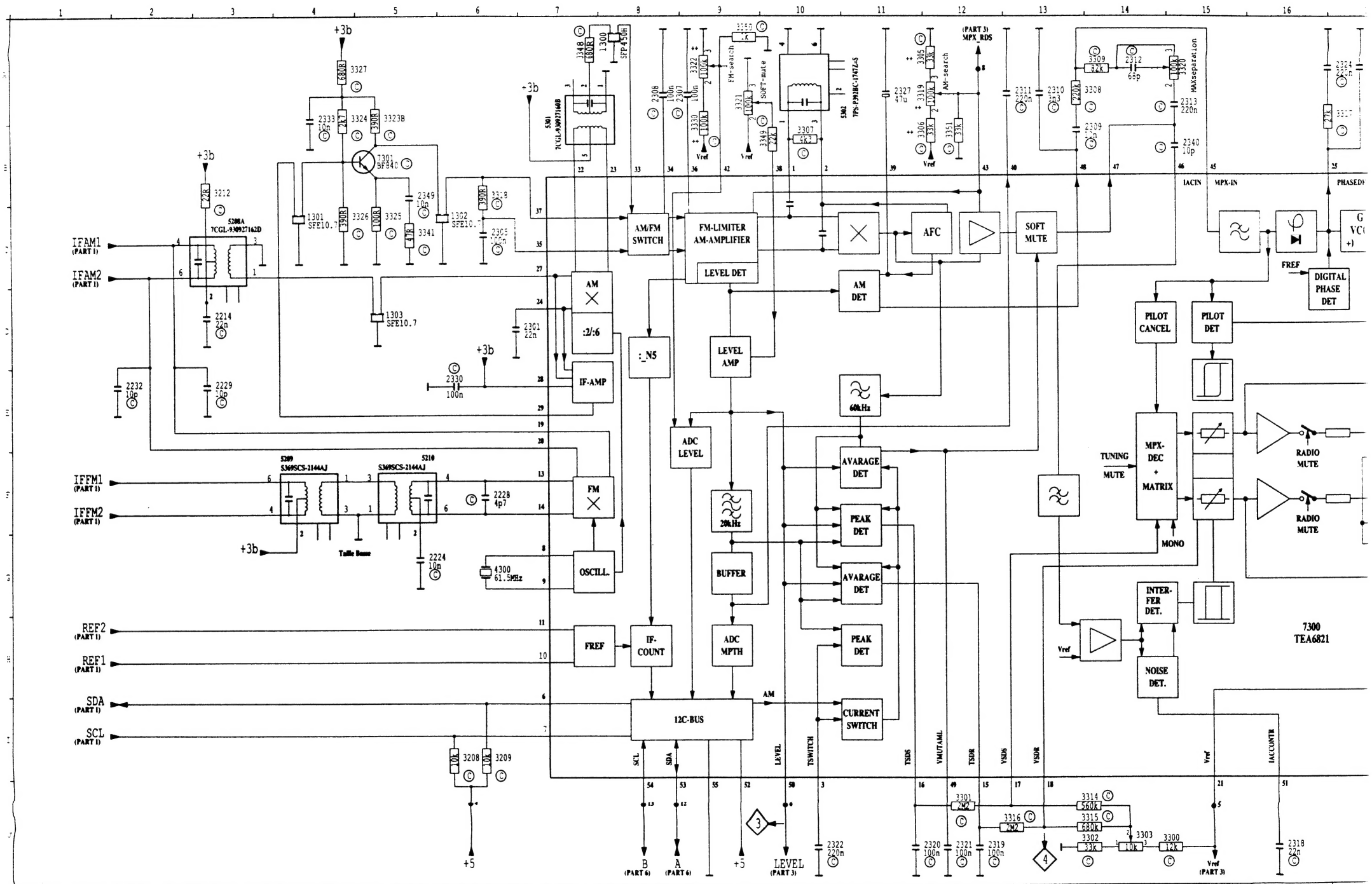

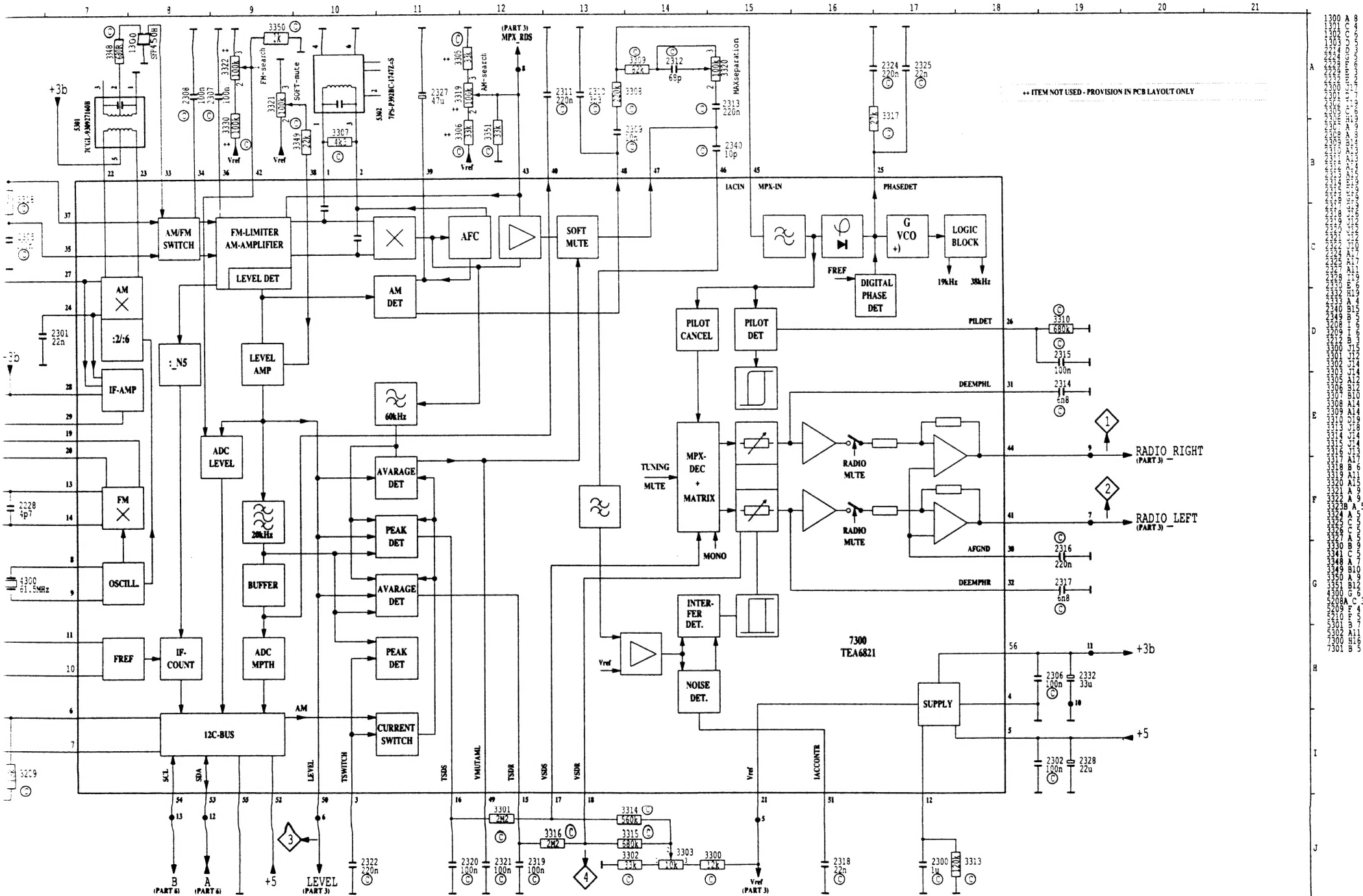
++ ITEM NOT USED - PROVISION IN PCB LAYOUT ONLY
7300
TEA6821
AM/FM SWITCH
FM-LIMITER AM-AMPLIFIER
LEVEL DET
AFC
SOFT MUTE
AM DET
AM
:2/:6
IF-AMP
:N5
LEVEL AMP
60kHz
ADC LEVEL
20kHz
BUFFER
ADC MPTH
AVARAGE DET
PEAK DET
AVARAGE DET
PEAK DET
CURRENT SWITCH
FM
OSCILL.
FREF
IF-COUNT
12C-BUS
PILOT CANCEL
PILOT DET
MPX-DEC + MATRIX
TUNING
MUTE
MONO
RADIO MUTE
RADIO MUTE
INTER-FER DET.
NOISE DET.
DIGITAL PHASE DET
G VCO +)
LOGIC BLOCK
19kHz
38kHz
SUPPLY
RADIO RIGHT (PART 3)
RADIO LEFT (PART 3)
+3b
+5
LEVEL (PART 3)
B (PART 6)
A (PART 6)
MPX_RDS (PART 3)
IACIN
MPX-IN
PHASEDET
PILDET
DEEMPHL
DEEMPHR
AFGND
FREF
Vref
AM
SCL
SDA
LEVEL
TSWITCH
TSDS
VMUTAML
TSDR
VSDS
VSDR
IACCONTR
FM-search
AM-search
Soft-mute
MAXseparation

7a 7b

PART 3 : RDS, SOFAC & LINE-IN INTERFACE (MAIN PCB)

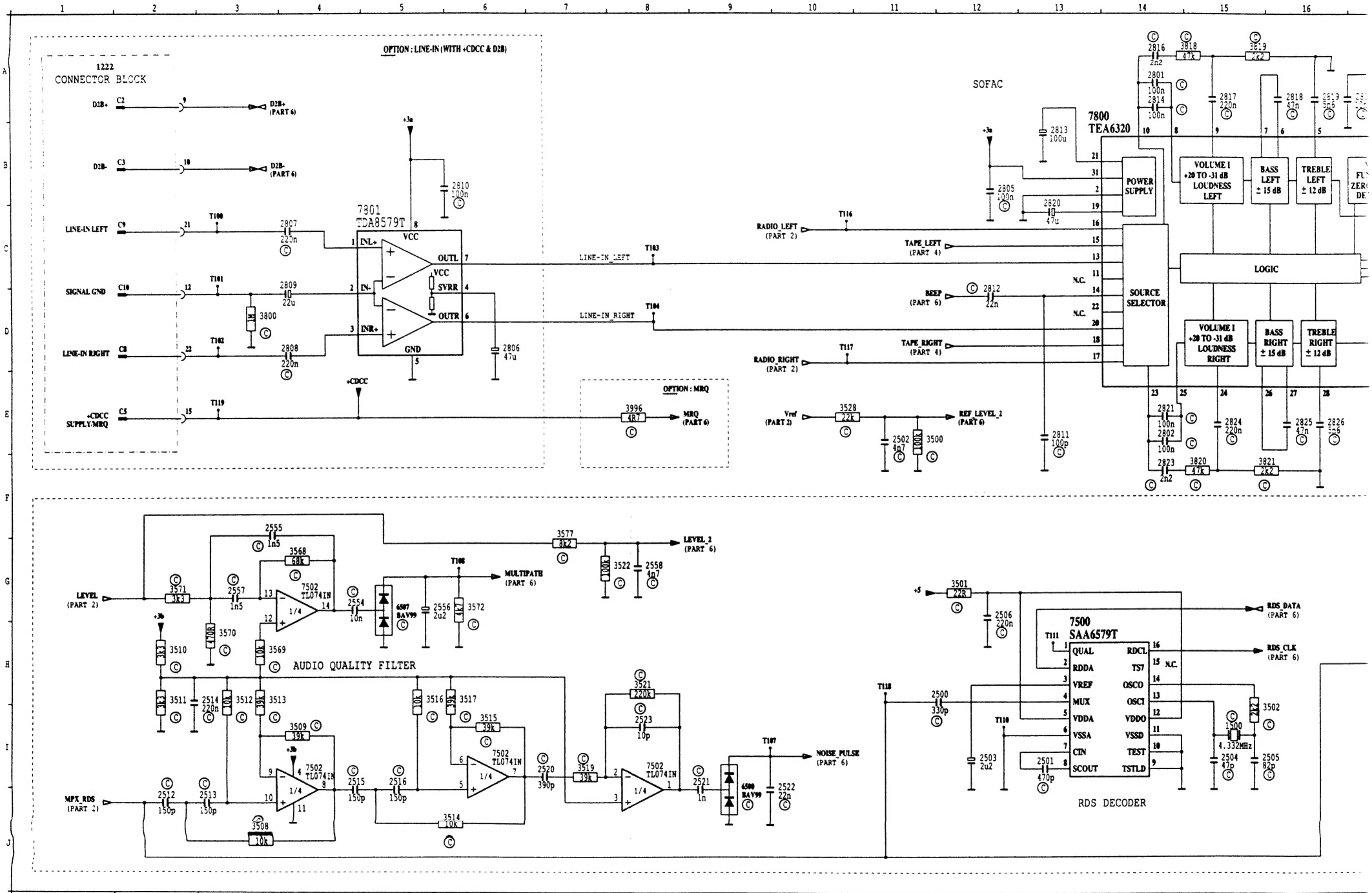

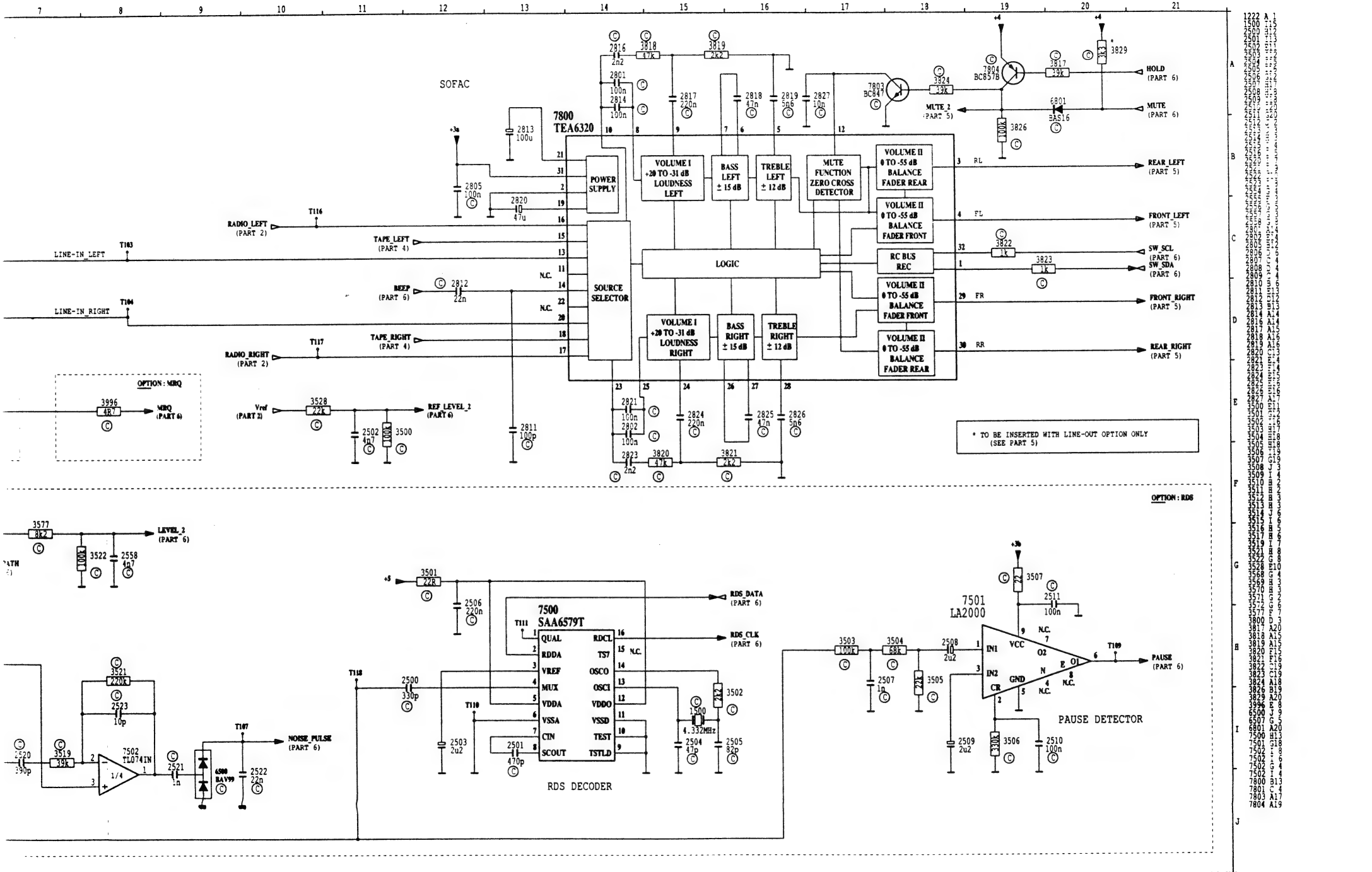

8a 8b

PCS 77 542

PART 4 : CASSETTE PREAMP (MAIN PCB)

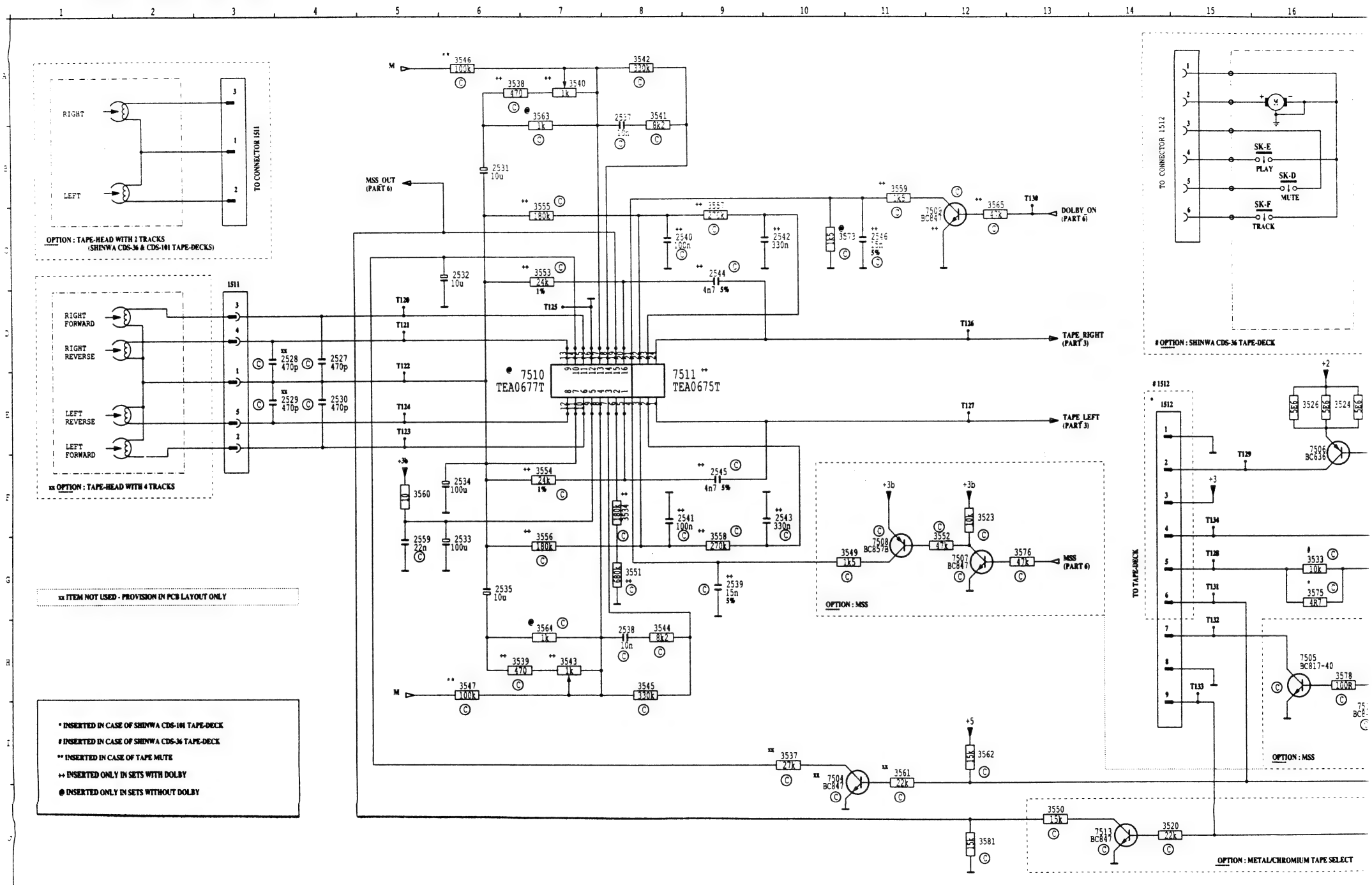

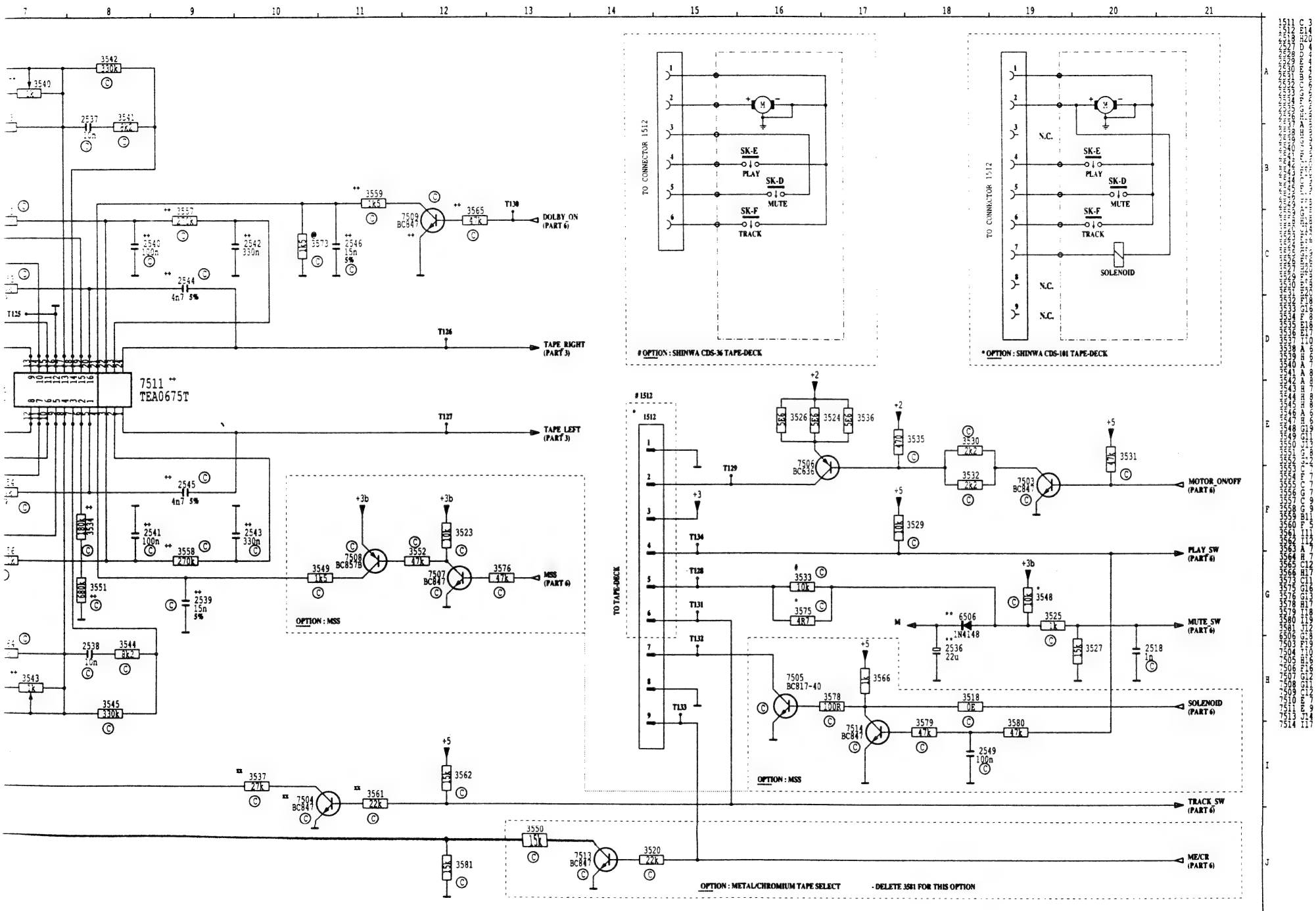
7511 TEA0675T
DOLBY_ON (PART 6)
TAPE_RIGHT (PART 3)
TAPE_LEFT (PART 3)
MSS (PART 6)
OPTION : MSS
MOTOR_ON/OFF (PART 6)
PLAY_SW (PART 6)
MUTE_SW (PART 6)
SOLENOID (PART 6)
TRACK_SW (PART 6)
ME/CR (PART 6)
OPTION : METAL/CHROMIUM TAPE SELECT
- DELETE 3581 FOR THIS OPTION
TO TAPE-DECK
TO CONNECTOR 1512
OPTION : SHINWA CDS-36 TAPE-DECK
* OPTION : SHINWA CDS-101 TAPE-DECK
SK-E
PLAY
SK-D
MUTE
SK-F
TRACK
SOLENOID
N.C.

9a

9b

PART 5 : POWER AMPLIFIER, LINE-OUT & RC INTERFACE (MAIN PCB)

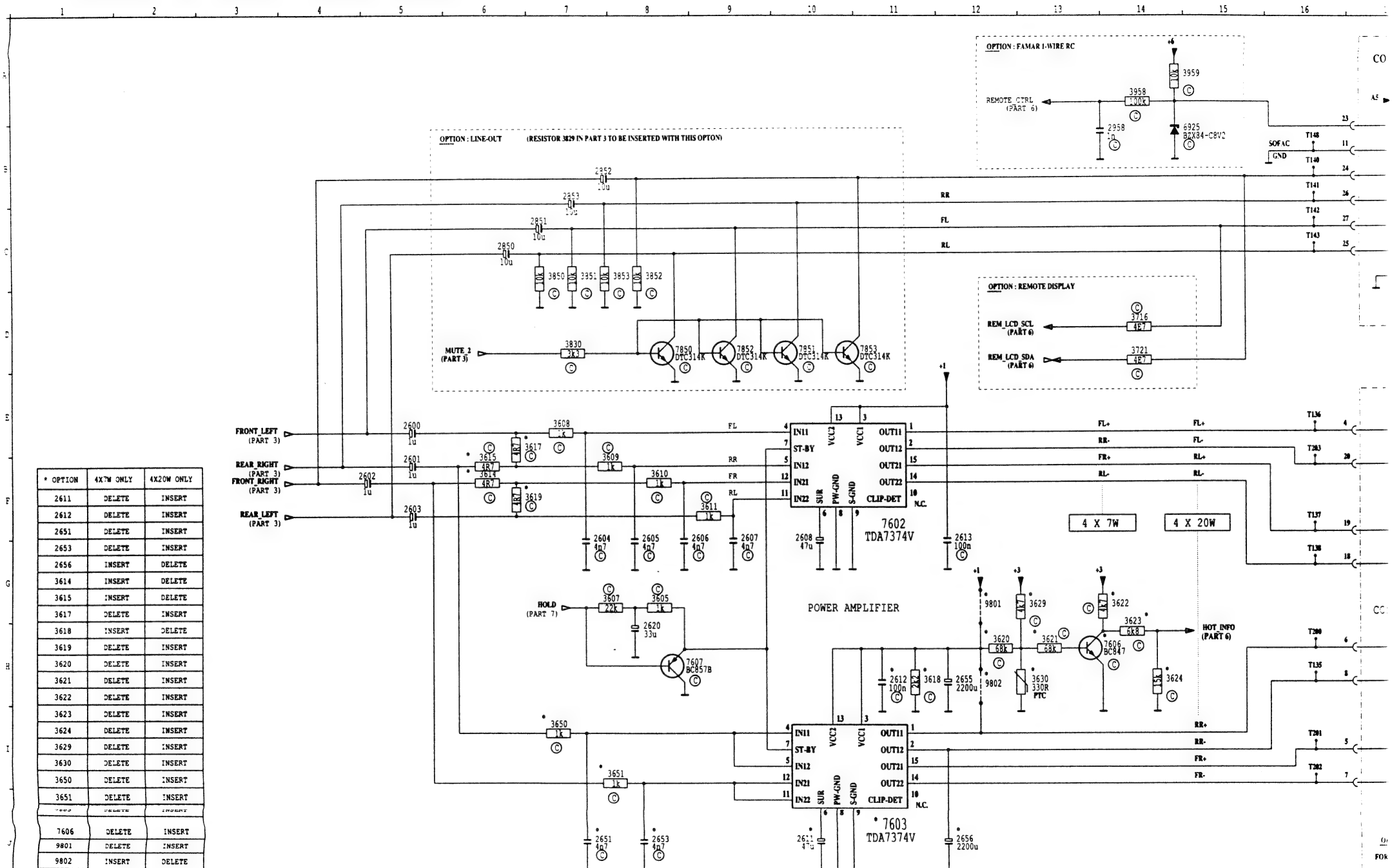

* OPTION	4X7W ONLY	4X20W ONLY
2611	DELETE	INSERT
2612	DELETE	INSERT
2651	DELETE	INSERT
2653	DELETE	INSERT
2656	INSERT	DELETE
3614	INSERT	DELETE
3615	INSERT	DELETE
3617	DELETE	INSERT
3618	INSERT	DELETE
3619	DELETE	INSERT
3620	DELETE	INSERT
3621	DELETE	INSERT
3622	DELETE	INSERT
3623	DELETE	INSERT
3624	DELETE	INSERT
3629	DELETE	INSERT
3630	DELETE	INSERT
3650	DELETE	INSERT
3651	DELETE	INSERT
[illegible]	[illegible]	[illegible]
7606	DELETE	INSERT
9801	DELETE	INSERT
9802	INSERT	DELETE

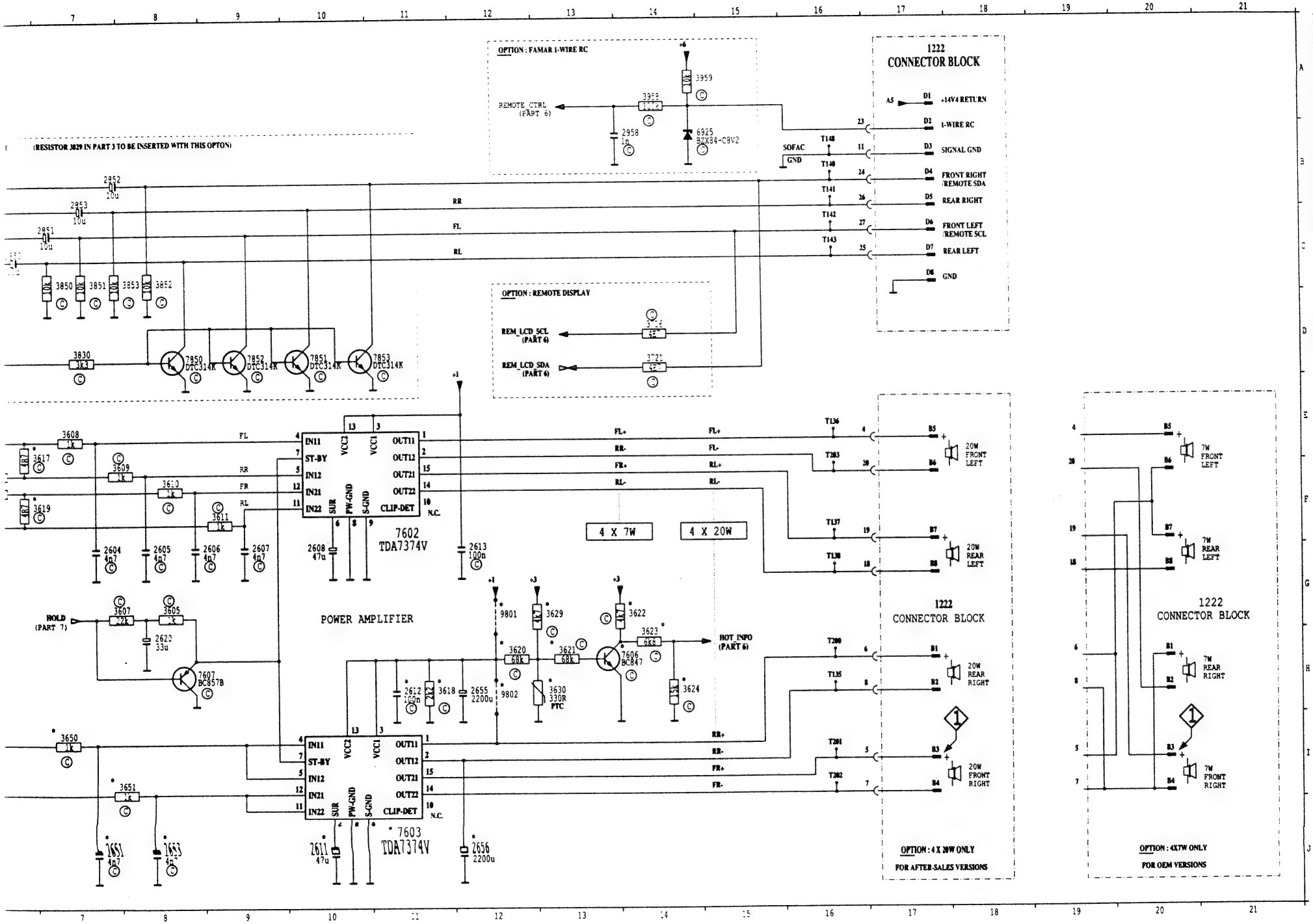

10a

10b

PCS 77 5

PART 6 : MAIN & 2ND MICRO-CONTROLLERS, EEPROM & CLOCK CIRCUIT (MAIN PCB)

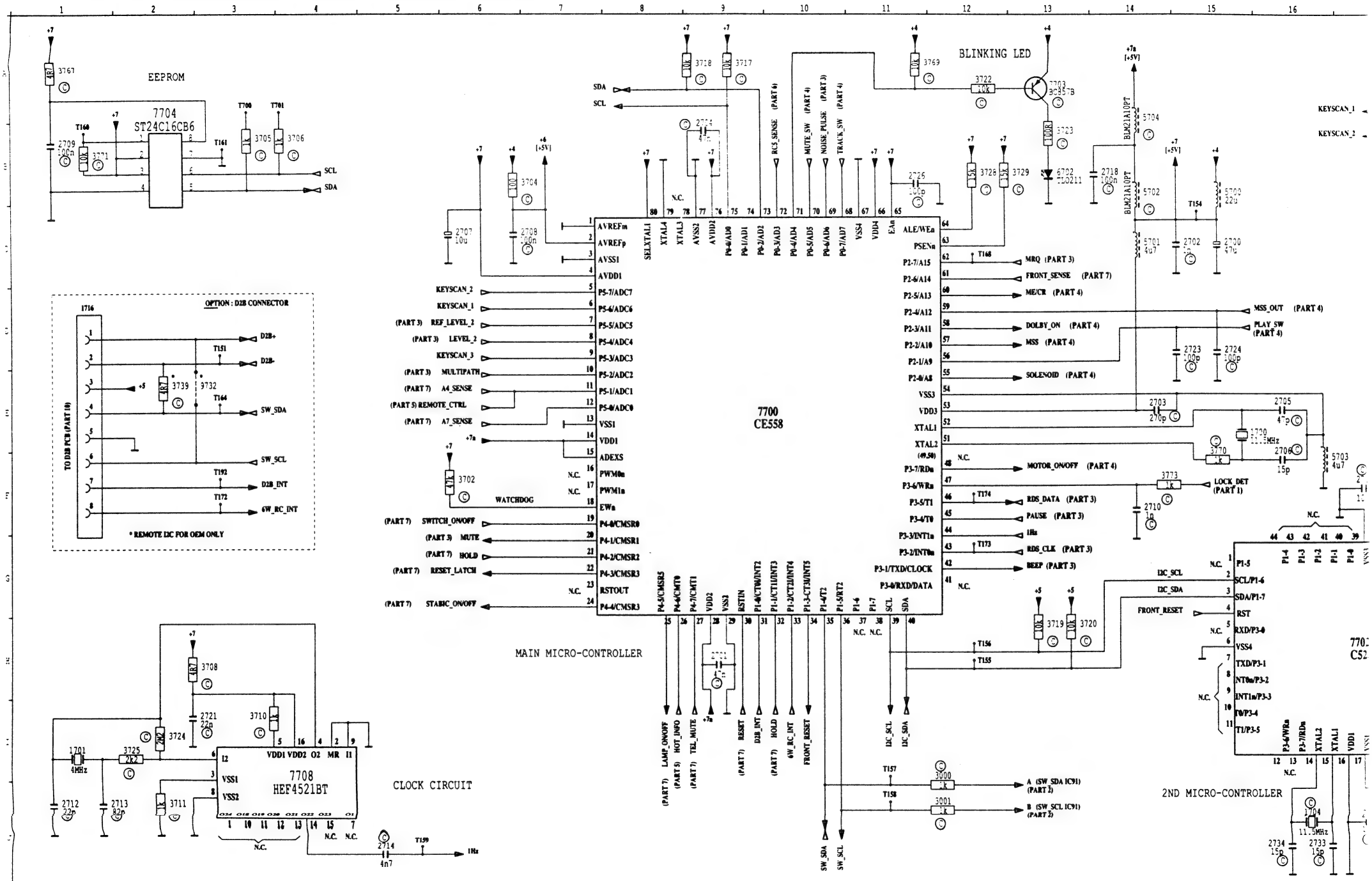

N PCB)

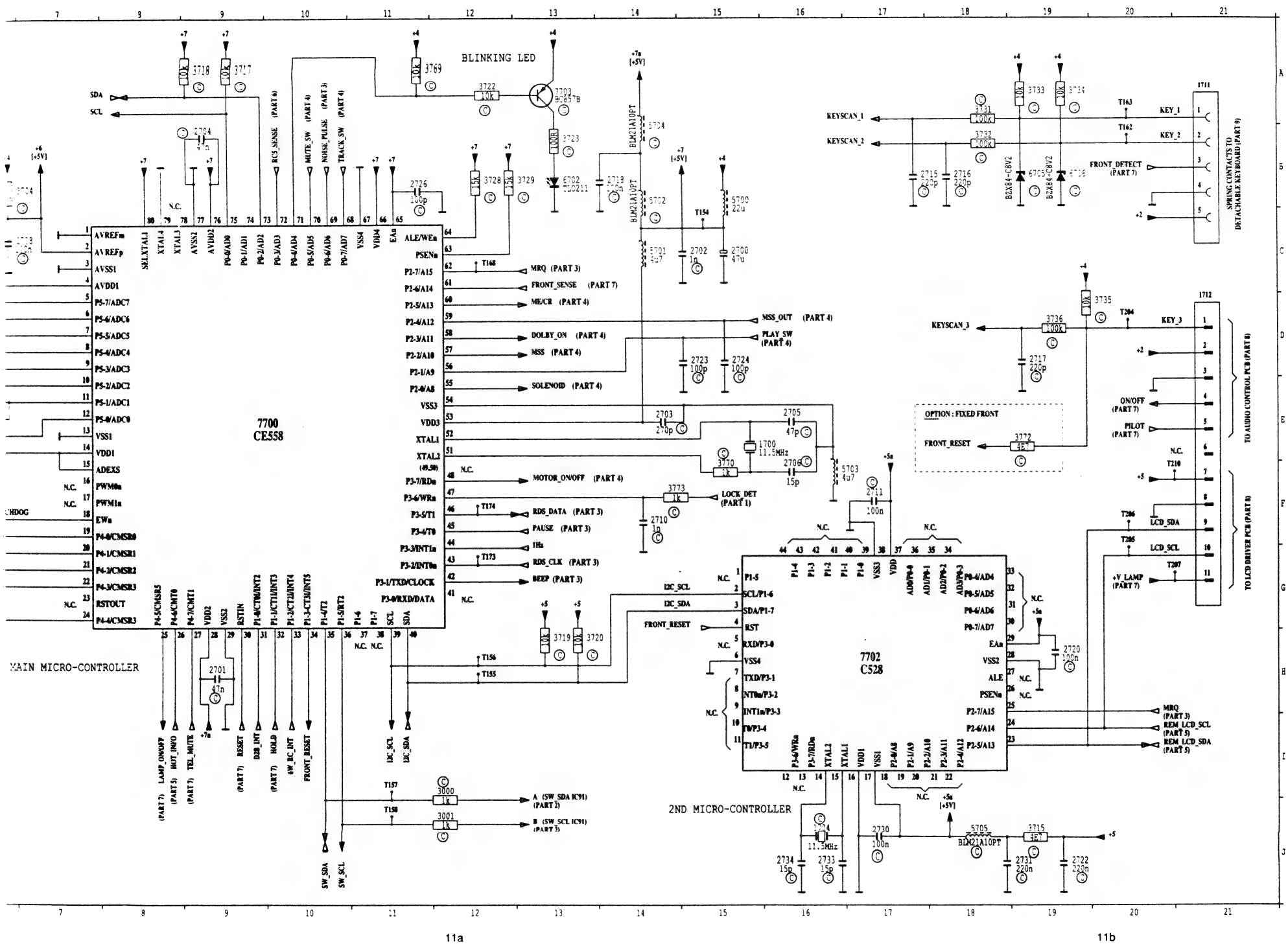
BLINKING LED
7700
CE558
MAIN MICRO-CONTROLLER
7702
C528
2ND MICRO-CONTROLLER
SDA
SCL
MRQ (PART 3)
FRONT_SENSE (PART 7)
ME/CR (PART 4)
MSS_OUT (PART 4)
PLAY SW (PART 4)
DOLBY_ON (PART 4)
MSS (PART 4)
SOLENOID (PART 4)
MOTOR_ON/OFF (PART 4)
LOCK_DET (PART 1)
RDS_DATA (PART 3)
PAUSE (PART 3)
1Hz
RDS_CLK (PART 3)
BEEP (PART 3)
I2C_SCL
I2C_SDA
FRONT_RESET
KEYSCAN_1
KEYSCAN_2
KEYSCAN_3
FRONT_DETECT (PART 7)
OPTION : FIXED FRONT
ON/OFF (PART 7)
PILOT (PART 7)
+V_LAMP (PART 7)
LCD_SDA
LCD_SCL
TO AUDIO CONTROL PCB (PART 8)
TO LCD DRIVER PCB (PART 8)
SPRING CONTACTS TO DETACHABLE KEYBOARD (PART 9)
REM_LCD_SCL (PART 5)
REM_LCD_SDA (PART 5)
A (SW_SDA IC91) (PART 2)
B (SW_SCL IC91) (PART 3)
SW_SDA
SW_SCL
LAMP_ON/OFF (PART 7)
HOT_IN/O (PART 5)
TEL_MUTE (PART 7)
RESET (PART 7)
D2B_INT (PART 7)
HOLD
6W_IIC_INT
FRONT_RESET
RC5_SENSE (PART 6)
MUTE_SW (PART 4)
NOISE_PULSE (PART 3)
TRACK_SW (PART 4)

11a

11b

PART 7 : SUPPLY (MAIN PCB)

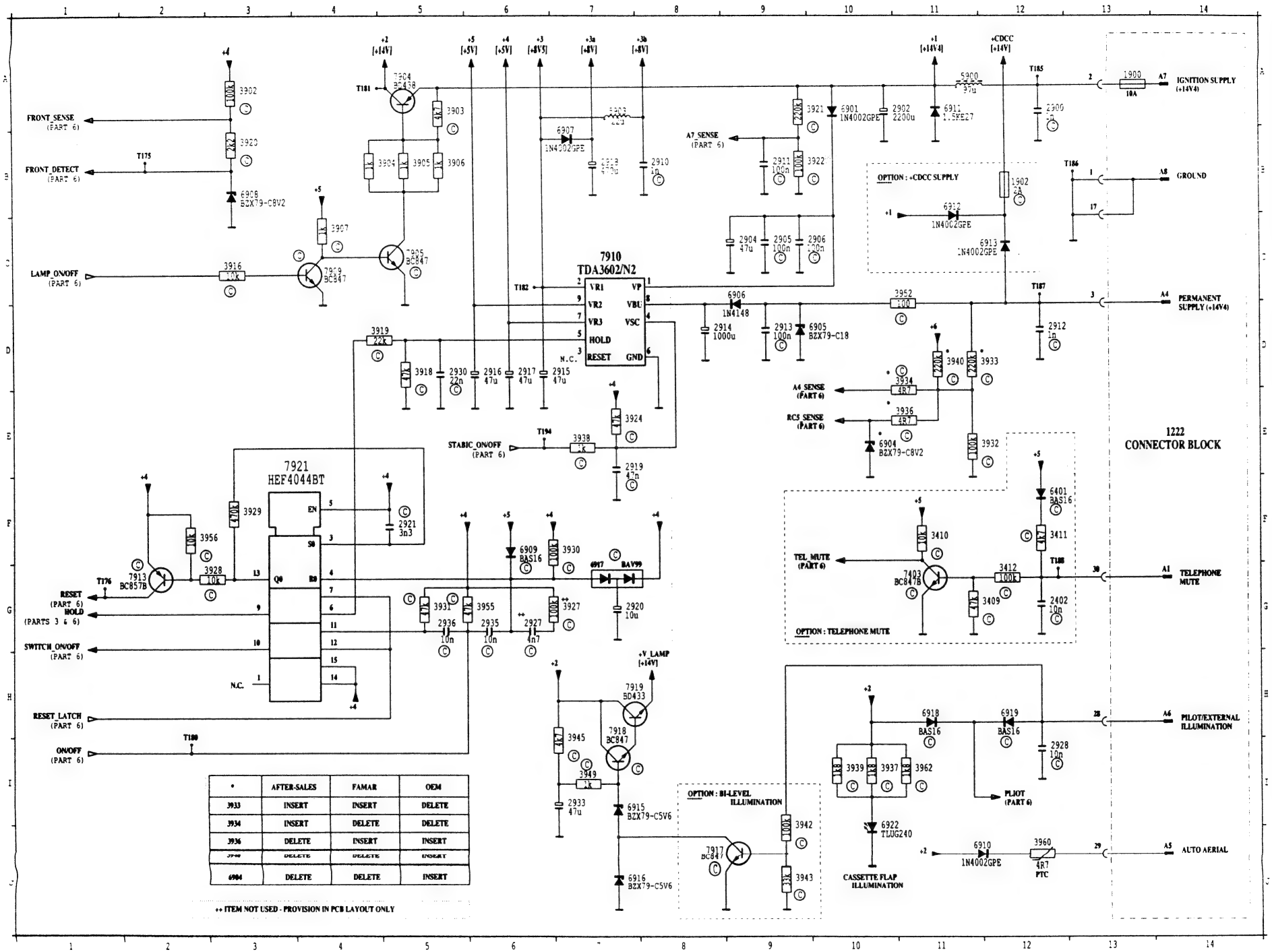

•	AFTER-SALES	FAMAR	OEM
3933	INSERT	INSERT	DELETE
3934	INSERT	DELETE	DELETE
3936	DELETE	INSERT	INSERT
3940	DELETE	DELETE	INSERT
6904	DELETE	DELETE	INSERT

++ ITEM NOT USED - PROVISION IN PCB LAYOUT ONLY

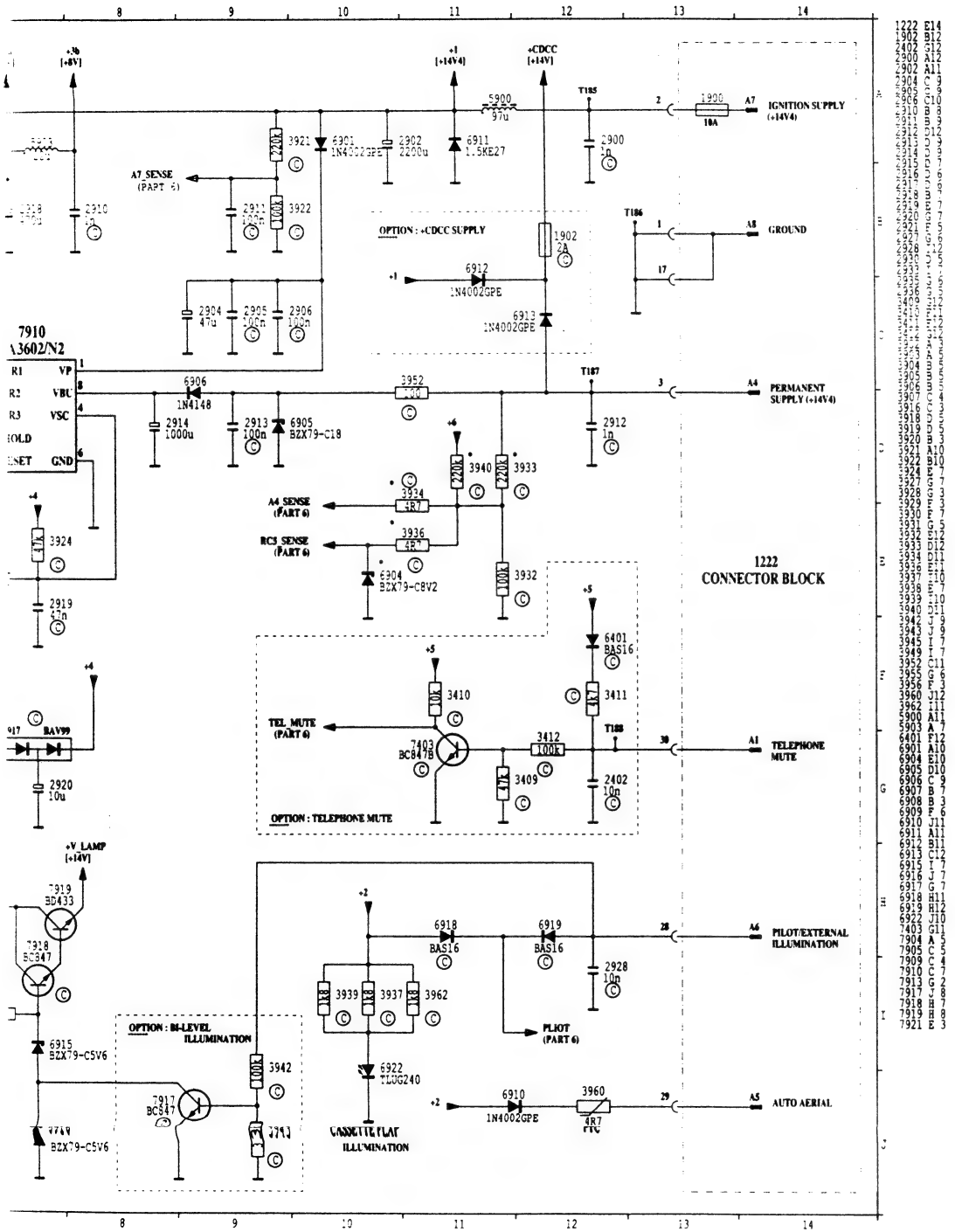

12a

7202 TEA6811

1	0V
2	5V
3	5V
4	5V
5	5V
6	0.24Vp-p 5VDC
7	0.24Vp-p 5VDC
8	0V
9	5V
10	0V
11	8.5V
12	8.5V
13	8.5V
14	0V
15	8.5V
16	8.5V
17	0V
18	0V
19	0V
20	0V
21	0V
22	0V
23	0V
24	0V
25	0V
26	0V
27	0V
28	0V
29	0V
30	3.1V
31	3.1V
32	0V
33	4.3V
34	4.2V
35	2.6V
36	0V
37	6.1V
38	8.2V
39	3.6V
40	3.5V

7921 HEF4044BT

1	N.C.
2	N.C.
3	3.5V
4	4.8V
5	5V
6	3.8V
7	5V
8	0V
9	5V
10	0V
11	5V
12	5V
13	5V
14	5V
15	5V
16	5V

7300 TEA6821

1	4V
2	4V
3	1V
4	0V
5	5V
6	5V
7	5V
8	4V
9	4V
10	0.24Vp-p 5VDC
11	0.24Vp-p 5VDC
12	5V
13	2.2V
14	2.2V
15	4.5V
16	4.5V
17	2.5V
18	2.5V
19	8.5V
20	8.5V
21	5V
22	8.5V
23	8.5V
24	4V
25	5V
26	3.6V
27	3V
28	8.5V
29	6V
30	1.8V
31	2.3V
32	2.3V
33	0.7V
34	1V
35	2.8V
36	2.8V
37	2.8V
38	2.6V
39	3.2V
40	0.6V
41	RL
42	0V
43	Audio signal
44	RR
45	2.9V
46	0V
47	Audio signal
48	5V
49	5V
50	4.5V
51	6V
52	5V
53	0-5Vp-p
54	0-5Vp-p
55	0V
56	8.5V

7500 SAA6579T

1	SQ Wave 5Vp-p
2	SQ Wave 5Vp-p
3	2.5V
4	Audio signal
5	5V
6	0V
7	Audio signal
8	Audio signal
9	0V
10	0V
11	0V
12	5V
13	sine Wave 0.6Vp-p
14	sine Wave 3.2Vp-p
15	N.C.
16	SQ Wave 5Vp-p

7501 LA2000

1	1.83V
2	8V
3	2.1V
4	N.C.
5	0V
6	5V
7	N.C.
8	N.C.
9	8.5V

7502 TL074

1	Audio signal 4.3VDC
2	4.3V
3	4.3V
4	5V
5	4.3V
6	4.3V
7	Audio signal 4.3VDC
8	Audio signal 4.3VDC
9	SAW Wave 1.8Vp-p 3.5VDC
10	4.3V
11	0V
12	4.3V
13	4.3V
14	Audio signal 4.3VDC

7910 TDA3602

1	12V
2	8.5V
3	N.C.
4	0.16V
5	5V
6	0V
7	5V
8	11.6V
9	5V

7800 TEA6320/V1

1	SQ Wave 5Vp-p
2	0V
3	RL
4	FL
5	4V
6	4V
7	4V
8	3.5V
9	4V
10	4V
11	4V
12	8V
13	5.7V
14	4V
15	4V
16	4V
17	3.6V
18	4V
19	7.8V
20	5.6V
21	4V
22	4V
23	3.6V
24	4V
25	3.5V
26	4V
27	4V
28	4V
29	FR
30	RR
31	8V
32	SQ Wave 5Vp-p

7511 TEA0675/V1 (PLAY POSITION)

1	4V
2	4V
3	4.3V
4	4V
5	4V
6	6.4V
7	4V
8	4V
9	8.2V
10	4V
11	4V
12	3.6V
13	3.6V
14	6.3V
15	4V
16	0V
17	4V
18	4V
19	0.17V
20	4V
21	4V
22	4V
23	4V
24	4V

7600 MC14066BCP

1	RL
2	4V
3	4V
4	FL
5	0.1V
6	0.1V
7	0V
8	FR
9	4V
10	4V
11	RR
12	8V
13	8V
14	8V

7602 TDA7374

1	FL+
2	RR-
3	14.4V
4	FL
5	5
6	0.7V
7	4V
8	OV
9	0V
10	N.C.
11	RL
12	FR
13	14.4V
14	RL-
15	FR+

7708 HEF4521BT

1	N.C.
2	0V
3	0V
4	SINE Wave 2.4Vp-p 0.5VDC
5	5V
6	SINE Wave 1Vp-p 1.6VDC
7	N.C.
8	0V
9	0V
10	N.C.
11	N.C.
12	N.C.
13	N.C.
14	SQ Wave 5Vp-p
15	N.C.
16	5V

7704 ST24C16CB6

1	5V
2	5V
3	5V
4	0V
5	5V
6	5V
7	0V
8	5V

ALIGNMENT TABLE

For more information see general information " General alignment procedures for car radio"

Alignment	SK					
RF Coil	FM	88MHz no signal	A		5201	5 1.2V±30mV DC
FM – RF	FM	88MHz, 44µV Unmodulated	A		5100	3 1.35V±50mV DC
RF Trimmer	FM	104MHz, 44µV Unmodulated	A		2226	3 Max. V DC
FM – IF	FM	98MHz, 44µV Unmodulated	A		5210 5209	3 Max. V DC
FM – IF	FM	98MHz, 44µV Unmodulated	A		5208	3 Max. V DC
AM – IF	AM	1053kHz, 44µV 1kHz, AM = 30%	B		5301	3 Max. V DC
SDS 10dB Crosstalk	FM	98MHz, 150µV Δf = 22.5kHz mod= 1kHz stereo - R	A		3303	L 2 – R 1 ≥ 10dB
Crosstalk	FM	98MHz, 1 mV Δf = 22.5kHz mod= 1kHz stereo - R	A		3320	L 2 – R 1 ≥ 30dB
α – 3 dB	FM	93 MHz, 1 mV Δ f = 22.5 kHz f mod. = 400 Hz	A			1 0 dB
		93 MHz, 5 µV Δ f = 22.5 kHz f mod. = 400 Hz				1 - 3 dB

CHECK TABLE

Check	SK				Setting of controls	
VC – FM	FM	no signal		87.5MHz		4 ≥ 1.17VDC
				108MHz		4 ≥ 5.0VDC
VC – AM	LW	no signal		144 kHz		4 ≥ 1.5VDC
	MW			1611 kHz		4 ≤ 7VDC

MAIN BOARD (NON- CHIP)

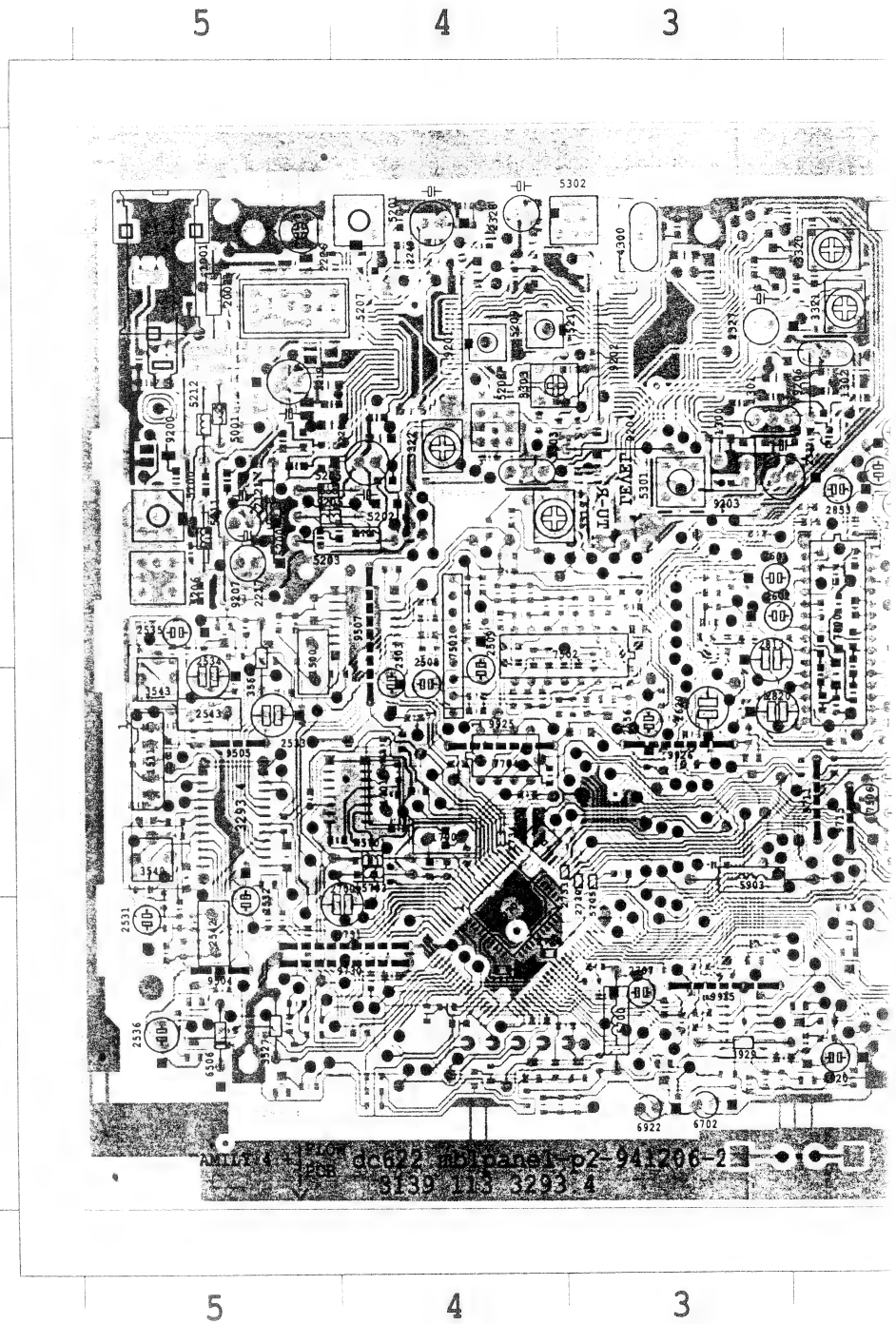

car radio"

MAIN BOARD (NON- CHIP)

5	1.2V±30mV DC
3	1.35V±50mV DC
3	Max. V DC
3	Max. V DC
3	Max. V DC
3	Max. V DC
L 2 – R 1	≥ 10dB
L 2 – R 1	≥ 30dB
1	0 dB
1	- 3 dB

4	≥ 1.17VDC
4	≥ 5.0VDC
4	≥ 1.5VDC
4	≤ 7VDC

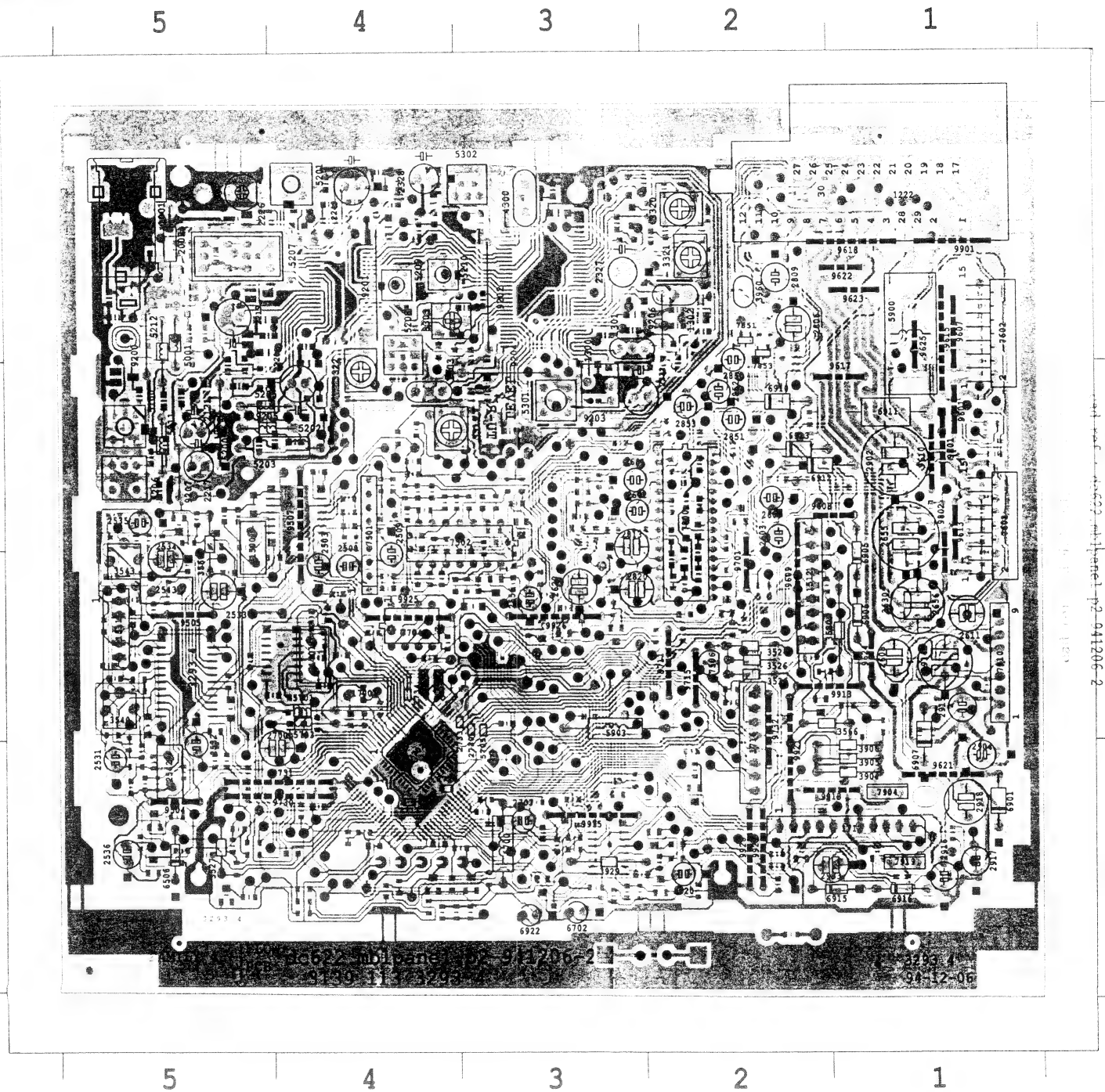

1222	A 1	9617	B 1
1511	C 5	9618	A 1
1512	C 2	9621	D 1
1704	C 4	9622	A 1
1712	D 1	9623	A 1
1716	D 2	9624	C 1
2655	B 1	9625	A 1
2656	C 1	9701	C 2
2711	D 4	9711	C 2
2720	D 4	9715	C 2
2730	C 3	9730	D 4
2733	C 4	9731	D 4
2734	C 4	9732	C 2
2902	B 1	9801	B 1
2914	C 1	9802	C 1
2918	D 1	9901	A 1
3524	C 2	9913	C 2
3526	C 2	9915	D 3
3527	D 5	9918	D 2
3536	C 2	9921	D 2
3560	B 5	9925	C 4
3566	C 2	9926	C 3
3580	C 1	9928	D 2
3904	D 1	9929	D 2
3905	D 1	----	
3906	D 1	1001	A 5
3929	D 3	1300	B 3
5700	D 3	2002	A 5
5701	C 4	2226	A 5
5703	C 4	3303	A 4
5705	C 3	5001	A 5
5900	A 1	5100	B 5
5903	C 3	5200	B 5
6506	D 5	5201	A 4
6901	D 1	5202	B 5
6905	C 1	5203	B 4
6906	C 1	5205	B 5
6907	C 1	5206	B 5
6910	B 2	5207	A 5
6911	B 1	5208	A 4
6912	B 2	5209	A 4
6913	B 2	5210	A 4
6915	D 1	5211	B 5
6916	D 1	5212	A 5
7501	B 4	5301	B 3
7502	B 3	5302	A 3
7602	A 1	9200	A 5
7603	B 1	9201	A 4
7702	D 4	9202	A 3
7704	C 4	9203	B 3
7800	B 2	9204	B 3
7851	A 2	9205	B 5
7853	A 2	9206	A 2
7904	D 1	9207	B 5
7910	C 1		
7919	D 1		
9504	D 5		
9505	C 5		
9507	B 4		
9601	B 1		
9607	A 1		
9608	B 1		
9609	C 2		
9610	B 1		
9613	B 1		
9615	A 1		

c&d ref : dc622_mblpanel_pz-941206-2

MAIN BOARD (CHIP)

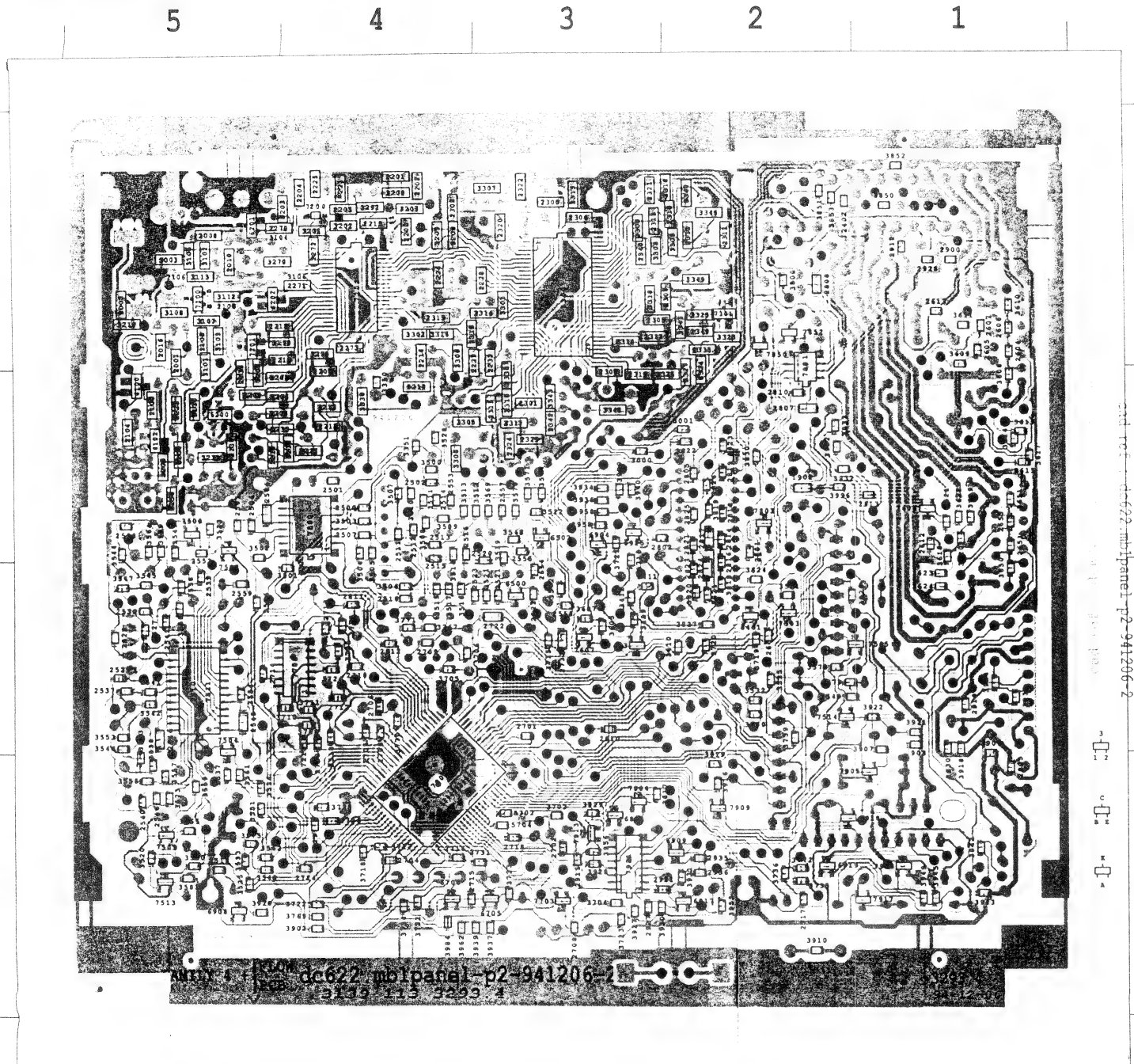

1902 B 2	2723 C 4	3520 D 5	3624 C 1	3931 D 2	2001 A 5	2340 A
2402 A 2	2724 D 4	3521 C 3	3629 B 1	3932 B 2	2003 A 5	2349 A
2500 B 4	2726 D 4	3522 B 3	3650 C 1	3933 B 2	2010 A 5	3003 A
2501 B 4	2731 C 3	3523 B 5	3651 B 1	3934 B 3	2016 A 5	3101 A
2502 B 4	2801 B 2	3525 D 5	3702 D 3	3936 B 3	2100 B 5	3102 A
2504 B 5	2802 B 3	3528 B 4	3704 D 3	3937 D 3	2102 A 5	3103 A
2505 B 5	2805 B 2	3529 C 2	3705 C 4	3938 C 1	2104 B 5	3104 A
2506 B 5	2807 B 2	3530 C 2	3706 C 4	3939 D 4	2105 A 5	3105 A
2507 B 4	2808 A 2	3531 C 2	3708 C 4	3940 B 3	2106 A 5	3106 A
2510 C 4	2810 B 2	3532 C 2	3710 C 5	3942 D 1	2200 A 4	3107 A
2511 B 4	2811 C 4	3533 D 5	3711 C 4	3943 D 1	2201 A 4	3108 A
2512 B 4	2812 C 4	3534 D 5	3715 C 3	3945 D 1	2202 A 4	3110 B
2513 B 4	2814 B 2	3535 C 2	3716 C 3	3949 D 1	2203 A 5	3112 A
2514 B 4	2816 C 2	3537 D 5	3717 D 4	3952 B 2	2204 A 4	3113 A
2515 B 4	2817 B 2	3538 D 5	3718 D 4	3955 D 2	2205 A 4	3199 A
2516 B 4	2818 B 2	3539 B 5	3719 C 2	3956 D 3	2206 B 5	3200 A
2518 D 5	2819 B 2	3541 C 5	3720 C 2	3958 B 3	2207 B 4	3201 A
2520 C 3	2821 B 2	3542 C 5	3721 B 3	3959 B 3	2208 B 5	3202 A
2521 C 3	2823 C 2	3544 B 5	3722 D 4	3962 D 4	2209 B 5	3203 B
2522 C 3	2824 C 2	3545 C 5	3723 D 3	3984 D 4	2210 A 5	3204 B
2523 C 4	2825 B 2	3546 C 5	3724 C 4	3996 B 2	2211 B 4	3205 B
2527 C 5	2826 B 2	3547 C 5	3725 C 4	5702 D 3	2212 B 5	3206 B
2528 C 5	2827 C 2	3548 D 5	3728 D 4	5704 D 3	2213 B 4	3207 A
2529 C 5	2900 A 1	3549 B 5	3729 D 4	6401 C 2	2214 A 4	3208 A
2530 C 5	2905 D 1	3550 D 5	3731 D 4	6500 C 3	2215 A 4	3209 A
2537 C 5	2906 D 1	3551 D 5	3732 D 4	6507 B 3	2218 A 5	3210 A
2538 B 5	2910 C 3	3552 B 5	3733 D 3	6705 D 3	2221 A 4	3211 B
2539 C 5	2911 D 3	3553 C 5	3734 D 4	6706 D 4	2223 B 5	3212 B
2540 D 5	2912 A 1	3554 C 5	3735 D 2	6801 D 3	2224 A 4	3213 B
2541 C 5	2913 B 1	3555 D 5	3736 D 2	6904 B 3	2225 A 4	3250 B
2544 C 5	2919 C 1	3556 C 5	3739 C 2	6908 D 5	2227 B 4	3270 A
2545 C 5	2921 D 3	3557 D 5	3767 C 4	6909 D 2	2228 A 3	3290 A
2546 D 5	2927 D 3	3558 C 5	3769 D 4	6917 D 2	2229 A 4	3292 A
2549 C 2	2928 A 1	3559 D 5	3770 C 4	6918 D 2	2230 B 5	3300 A
2553 B 4	2930 C 1	3561 D 5	3771 C 4	6919 D 2	2231 B 5	3301 A
2554 C 3	2935 D 2	3562 D 5	3772 D 2	6925 B 3	2232 A 3	3302 A
2555 B 3	2936 D 2	3563 D 5	3773 C 4	7403 C 3	2233 B 5	3305 B
2557 B 3	2958 B 3	3564 B 5	3800 A 2	7500 B 4	2270 A 5	3306 B
2558 C 3	3000 B 3	3565 D 5	3817 D 3	7503 C 2	2271 A 4	3307 A
2559 C 5	3001 B 2	3568 B 3	3818 C 2	7504 C 5	2272 A 4	3308 A
2604 A 1	3350 B 4	3569 B 3	3819 B 2	7505 C 2	2273 A 4	3309 A
2605 A 1	3351 B 4	3570 B 3	3820 C 2	7507 B 5	2300 A 3	3310 B
2606 A 1	3409 C 3	3571 B 3	3821 C 2	7508 B 5	2301 B 3	3313 A
2607 A 1	3410 C 2	3572 C 3	3822 B 2	7509 D 5	2302 A 4	3314 A
2612 B 1	3411 C 3	3573 D 5	3823 B 2	7510 C 5	2305 A 3	3315 A
2613 A 1	3412 C 3	3575 D 5	3824 C 2	7511 C 5	2306 A 3	3316 A
2651 B 1	3500 B 4	3576 C 5	3826 C 2	7513 D 5	2307 A 2	3317 B
2653 B 1	3501 C 4	3577 B 3	3829 D 3	7514 C 2	2308 B 3	3318 A
2701 C 3	3502 B 5	3578 C 2	3850 A 1	7606 B 1	2309 A 3	3323 A
2702 D 3	3503 B 4	3579 C 2	3851 A 2	7607 C 3	2310 A 2	3324 B
2703 C 4	3504 B 4	3581 D 5	3852 A 1	7700 D 4	2311 A 2	3325 A
2704 D 4	3505 B 4	3605 C 3	3853 A 2	7703 D 3	2312 A 2	3326 B
2705 C 4	3506 C 4	3607 C 3	3902 D 4	7708 C 4	2313 A 3	3327 B
2706 C 4	3507 B 4	3608 B 1	3903 C 1	7801 B 2	2314 A 3	3330 B
2708 D 3	3508 B 4	3609 A 1	3907 C 1	7803 B 2	2315 B 3	3341 A
2709 C 4	3509 B 4	3610 A 1	3910 D 2	7804 D 3	2316 B 3	3342 B
2710 C 4	3510 B 4	3611 A 1	3916 D 2	7850 A 2	2317 A 3	3343 B
2712 C 4	3511 B 4	3614 B 1	3918 C 1	7852 A 2	2318 A 2	3346 A
2713 C 4	3512 B 4	3615 B 1	3919 D 2	7905 D 1	2319 A 4	3347 A
2714 C 5	3513 B 4	3617 B 1	3920 D 5	7909 D 2	2320 A 3	3348 B
2715 D 4	3514 B 4	3618 B 1	3921 C 1	7913 D 3	2321 A 3	3349 A
2716 D 4	3515 C 4	3619 B 1	3922 C 1	7917 D 1	2322 A 3	6100 B
2717 D 2	3516 C 4	3620 B 1	3924 C 1	7918 D 1	2324 B 3	6102 B
2718 D 3	3517 C 4	3621 B 1	3927 D 3	7921 D 3	2325 B 3	6200 B
2721 C 4	3518 C 4	3622 B 1	3928 D 3	----	2330 B 3	6201 A
2722 C 3	3519 B 3	3623 C 1	3930 D 3	2000 A 5	2333 A 2	6202 A

1902 B 2	2723 C 4	3520 D 5	3624 C 1	3931 D 2	2001 A 5	2340 A 3	7100 A 5	
2402 A 2	2724 D 4	3521 C 3	3629 B 1	3932 B 2	2003 A 5	2349 A 2	7200 A 4	
2500 B 4	2726 D 4	3522 B 3	3650 C 1	3933 B 2	2010 A 5	3003 A 5	7201 A 5	
2501 B 4	2731 C 3	3523 B 5	3651 B 1	3934 B 3	2016 A 5	3101 A 5	7202 A 4	
2502 B 4	2801 B 2	3525 D 5	3702 D 3	3936 B 3	2100 B 5	3102 A 5	7300 A 3	
2504 B 5	2802 B 3	3528 B 4	3704 D 3	3937 D 3	2102 A 5	3103 A 5	7301 A 2	
2505 B 5	2805 B 2	3529 C 2	3705 C 4	3938 C 1	2104 B 5	3104 A 5		
2506 B 5	2807 B 2	3530 C 2	3706 C 4	3939 D 4	2105 A 5	3105 A 5		
2507 B 4	2808 A 2	3531 C 2	3708 C 4	3940 B 3	2106 A 5	3106 A 4		
2510 C 4	2810 B 2	3532 C 2	3710 C 5	3942 D 1	2200 A 4	3107 A 5		
2511 B 4	2811 C 4	3533 D 5	3711 C 4	3943 D 1	2201 A 4	3108 A 5		
2512 B 4	2812 C 4	3534 D 5	3715 C 3	3945 D 1	2202 A 4	3110 B 5		
2513 B 4	2814 B 2	3535 C 2	3716 C 3	3949 D 1	2203 A 5	3112 A 5		
2514 B 4	2816 C 2	3537 D 5	3717 D 4	3952 B 2	2204 A 4	3113 A 5		
2515 B 4	2817 B 2	3538 D 5	3718 D 4	3955 D 2	2205 A 4	3199 A 5		
2516 B 4	2818 B 2	3539 B 5	3719 C 2	3956 D 3	2206 B 5	3200 A 4		
2518 D 5	2819 B 2	3541 C 5	3720 C 2	3958 B 3	2207 B 4	3201 A 4		
2520 C 3	2821 B 2	3542 C 5	3721 B 3	3959 B 3	2208 B 5	3202 A 4		
2521 C 3	2823 C 2	3544 B 5	3722 D 4	3962 D 4	2209 B 5	3203 B 5		
2522 C 3	2824 C 2	3545 C 5	3723 D 3	3984 D 4	2210 A 5	3204 B 5		
2523 C 4	2825 B 2	3546 C 5	3724 C 4	3996 B 2	2211 B 4	3205 B 5		
2527 C 5	2826 B 2	3547 C 5	3725 C 4	5702 D 3	?212 B 5	3206 B 5		
2528 C 5	2827 C 2	3548 D 5	3728 D 4	5704 D 3	2213 B 4	3207 A 4		
2529 C 5	2900 A 1	3549 B 5	3729 D 4	6401 C 2	2214 A 4	3208 A 4		
2530 C 5	2905 D 1	3550 D 5	3731 D 4	6500 C 3	2215 A 4	3209 A 4		
2537 C 5	2906 D 1	3551 D 5	3732 D 4	6507 B 3	2218 A 5	3210 A 5		
2538 B 5	2910 C 3	3552 B 5	3733 D 3	6705 D 3	2221 A 4	3211 B 5		
2539 C 5	2911 D 3	3553 C 5	3734 D 4	6706 D 4	2223 B 5	3212 B 4		
2540 D 5	2912 A 1	3554 C 5	3735 D 2	6801 D 3	2224 A 4	3213 B 4		
2541 C 5	2913 B 1	3555 D 5	3736 D 2	6904 B 3	2225 A 4	3250 B 5		
2544 C 5	2919 C 1	3556 C 5	3739 C 2	6908 D 5	2227 B 4	3270 A 5		
2545 C 5	2921 D 3	3557 D 5	3767 C 4	6909 D 2	2228 A 3	3290 A 4		
2546 D 5	2927 D 3	3558 C 5	3769 D 4	6917 D 2	2229 A 4	3292 A 4		
2549 C 2	2928 A 1	3559 D 5	3770 C 4	6918 D 2	2230 B 5	3300 A 4		
2553 B 4	2930 C 1	3561 D 5	3771 C 4	6919 D 2	2231 B 5	3301 A 3		
2554 C 3	2935 D 2	3562 D 5	3772 D 2	6925 B 3	2232 A 3	3302 A 4		
2555 B 3	2936 D 2	3563 D 5	3773 C 4	7403 C 3	2233 B 5	3305 B 4		
2557 B 3	2958 B 3	3564 B 5	3800 A 2	7500 B 4	2270 A 5	3306 B 4		
2558 C 3	3000 B 3	3565 D 5	3817 D 3	7503 C 2	2271 A 4	3307 A 3		
2559 C 5	3001 B 2	3568 B 3	3818 C 2	7504 C 5	2272 A 4	3308 A 3		
2604 A 1	3350 B 4	3569 B 3	3819 B 2	7505 C 2	2273 A 4	3309 A 2		
2605 A 1	3351 B 4	3570 B 3	3820 C 2	7507 B 5	2300 A 3	3310 B 3		
2606 A 1	3409 C 3	3571 B 3	3821 C 2	7508 B 5	2301 B 3	3313 A 3		
2607 A 1	3410 C 2	3572 C 3	3822 B 2	7509 D 5	2302 A 4	3314 A 3		
2612 B 1	3411 C 3	3573 D 5	3823 B 2	7510 C 5	2305 A 3	3315 A 4		
2613 A 1	3412 C 3	3575 D 5	3824 C 2	7511 C 5	2306 A 3	3316 A 4		
2651 B 1	3500 B 4	3576 C 5	3826 C 2	7513 D 5	2307 A 2	3317 B 3		
2653 B 1	3501 C 4	3577 B 3	3829 D 3	7514 C 2	2308 B 3	3318 A 3		
2701 C 3	3502 B 5	3578 C 2	3850 A 1	7606 B 1	2309 A 3	3323 A 2		
2702 D 3	3503 B 4	3579 C 2	3851 A 2	7607 C 3	2310 A 2	3324 B 2		
2703 C 4	3504 B 4	3581 D 5	3852 A 1	7700 D 4	2311 A 2	3325 A 2		
2704 D 4	3505 B 4	3605 C 3	3853 A 2	7703 D 3	2312 A 2	3326 B 2		
2705 C 4	3506 C 4	3607 C 3	3902 D 4	7708 C 4	2313 A 3	3327 B 2		
2706 C 4	3507 B 4	3608 B 1	3903 C 1	7801 B 2	2314 A 3	3330 B 4		
2708 D 3	3508 B 4	3609 A 1	3907 C 1	7803 B 2	2315 B 3	3341 A 2		
2709 C 4	3509 B 4	3610 A 1	3910 D 2	7804 D 3	2316 B 3	3342 B 3		
2710 C 4	3510 B 4	3611 A 1	3916 D 2	7850 A 2	2317 A 3	3343 B 3		
2712 C 4	3511 B 4	3614 B 1	3918 C 1	7852 A 2	2318 A 2	3346 A 2		
2713 C 4	3512 B 4	3615 B 1	3919 D 2	7905 D 1	2319 A 4	3347 A 2		
2714 C 5	3513 B 4	3617 B 1	3920 D 5	7909 D 2	2320 A 3	3348 B 3		
2715 D 4	3514 B 4	3618 B 1	3921 C 1	7913 D 3	2321 A 3	3349 A 2		
2716 D 4	3515 C 4	3619 B 1	3922 C 1	7917 D 1	2322 A 3	6100 B 5		
2717 D 2	3516 C 4	3620 B 1	3924 C 1	7918 D 1	2324 B 3	6102 B 5		
2718 D 3	3517 C 4	3621 B 1	3927 D 3	7921 D 3	2325 B 3	6200 B 5		
2721 C 4	3518 C 4	3622 B 1	3928 D 3	----	2330 B 3	6201 A 5		
2722 C 3	3519 B 3	3623 C 1	3930 D 3	2000 A 5	2333 A 2	6202 A 5		

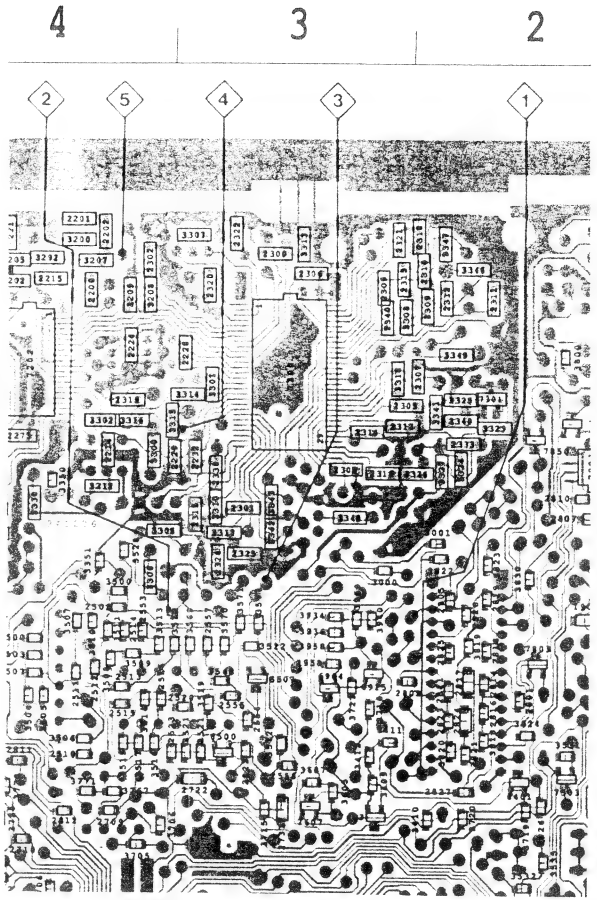

PART 8 : LCD DRIVER & AUDIO CONTROL (SUB-PCB)

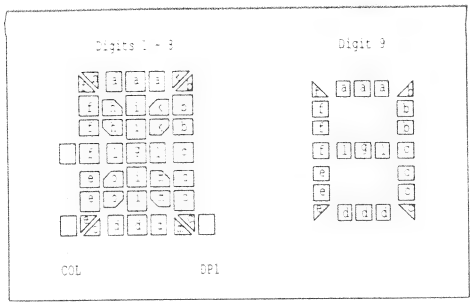

LCD PINOUT TABLE

7711 DRIVER PINS	1704 LCD PINS	COM 1	COM 2	COM 3	COM 4
13	1	COM 1			
14	2		COM 2		
15	3			COM 3	
16	4				COM 4
17	5	1h	1l	1f	1e
18	6	9a	9f	9d	9e
19	7	1a	1i	1o	9b
20	8	1k	1g	1m	1d
21	9	2a	1b	1c	TA
22	10	2h	2l	2f	2e
23	11	2k	2i	2o	2d
24	12	2b	2g	2c	2m
25	13	3h	3l	3f	3e
26	14	3a	3i	3o	9c
27	15	3k	3g	3m	3d
28	16	4a	3b	3c	LOC
45	17	4h	4l	4f	4e
44	18	4k	4i	4o	4d
43	19	4b	4g	4c	4m
42	20	5h	5l	5f	5e
41	21	5a	5i	5o	COL
40	22	5k	5g	5m	5d
39	23	6a	5b	5c	□□
38	24	6h	6l	6f	6e
37	25	6k	6i	6o	6d
36	26	6b	6g	6c	6m
35	27	7h	7l	7f	7e
34	28	7a	7i	7o	NEWS
33	29	7k	7g	7m	7d
32	30	8a	7b	7c	DP1
[illegible]	[illegible]	[illegible]	[illegible]	[illegible]	[illegible]
30	32	8k	8i	8o	8d
29	33	8b	8g	8c	8m

*	DC612/00, DC622/31B DC622/31L, DC632/00	DC612/80, DC632/65
1910 - 1912	AS SHOWN	12V_60mA
3790 & 3791	DELETE	INSERT

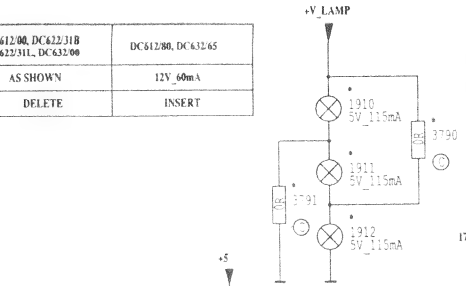

LCD DISPLAY :

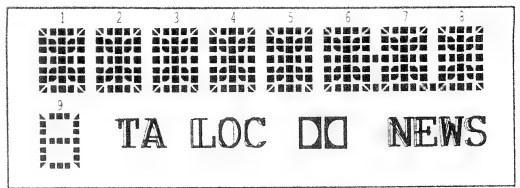

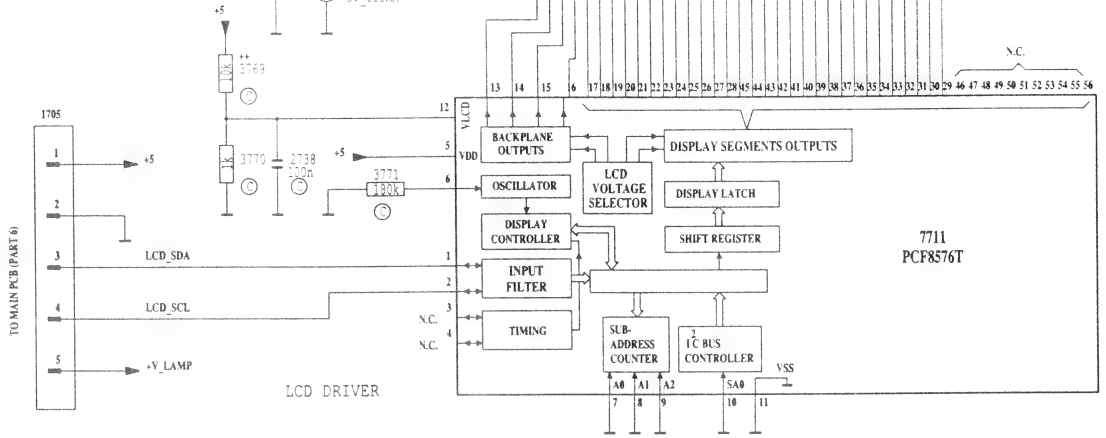

++ ITEM NOT USED - PROVISION IN PCB LAYOUT ONLY

#	AFTER-SALES/OEM	FAMAR
3766	12k	AS SHOWN
3767	10K	AS SHOWN
3768	22K	AS SHOWN

*	DC612/00 DC632/00	DC612/80	DC622/31B	DC622/31L DC632/65
1910 - 1912	ORANGE	CLEAR	GREEN	CLEAR
3757 - 3762	2k7	2k7	2k7	AS SHOWN
3763 - 3765	3k3	3k3	3k3	AS SHOWN
6722 - 6726	ORANGE	GREEN	GREEN	YELLOW

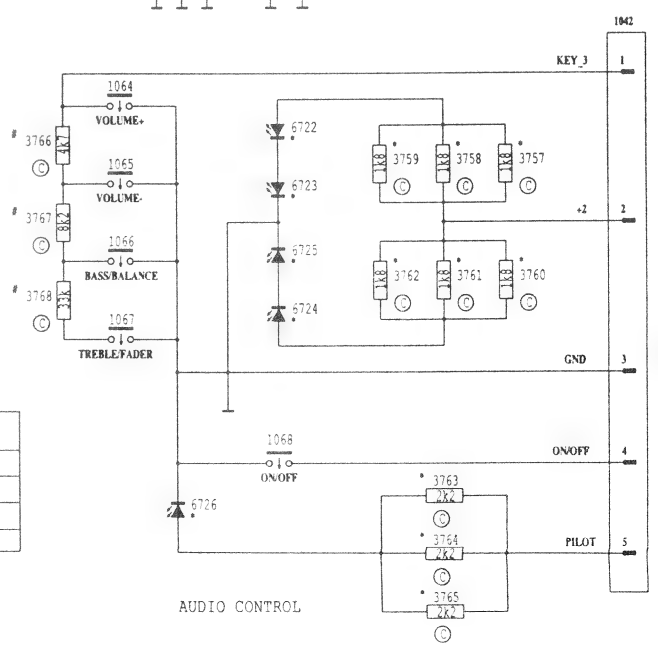

TO MAIN PCB (PART 6)

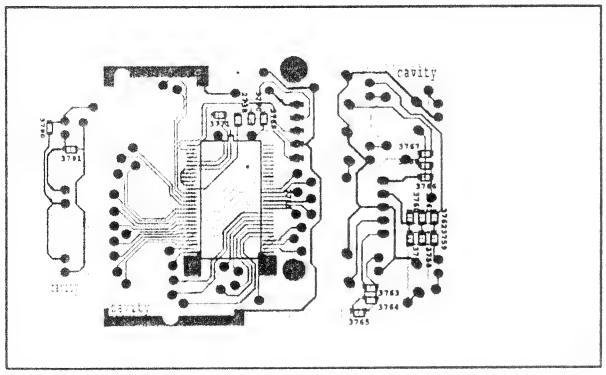

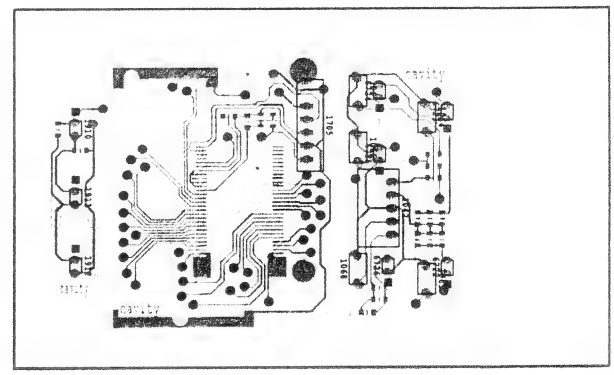

PART 9 : DETACHABLE KEYBOARD (SUB-PCB)

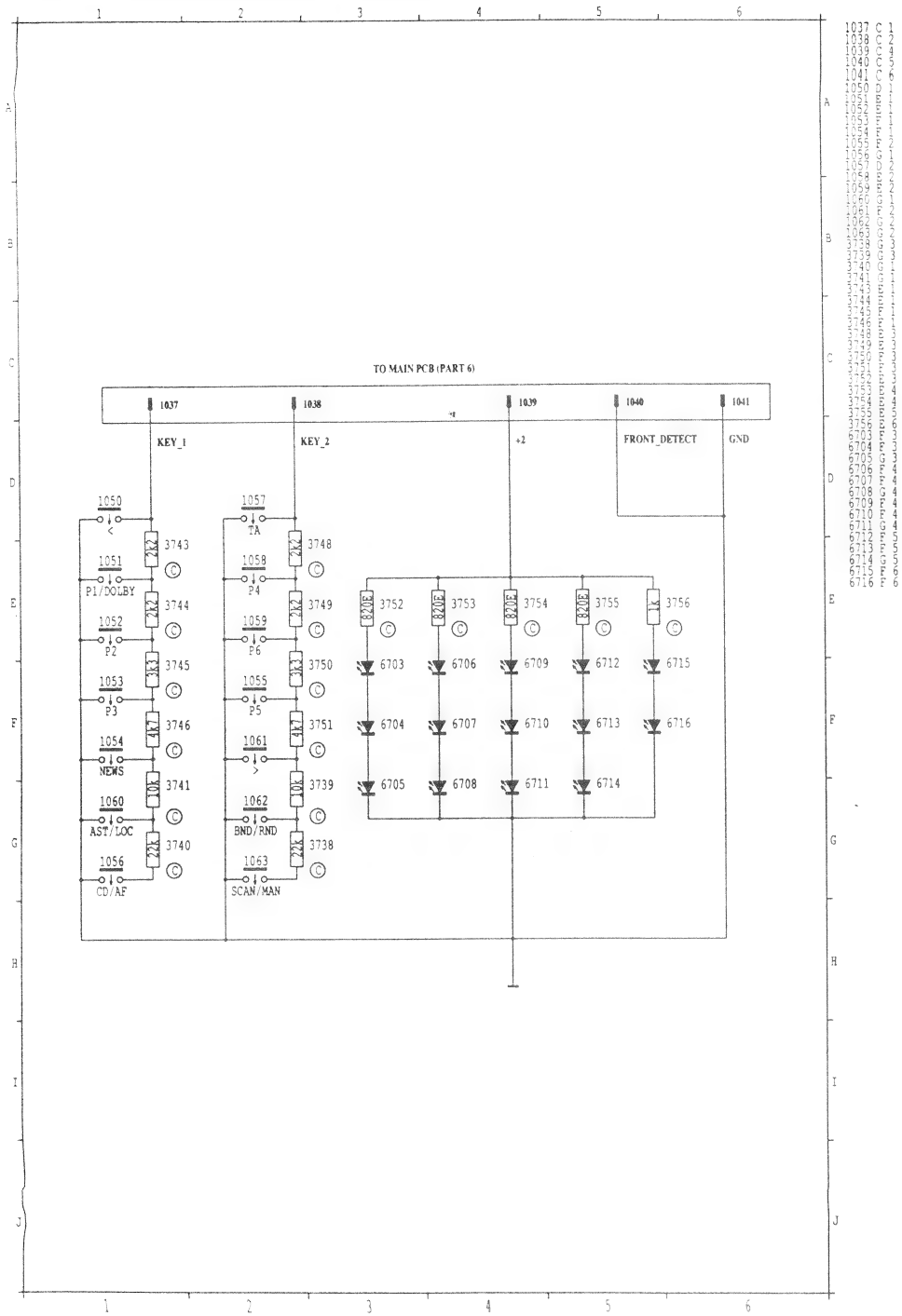

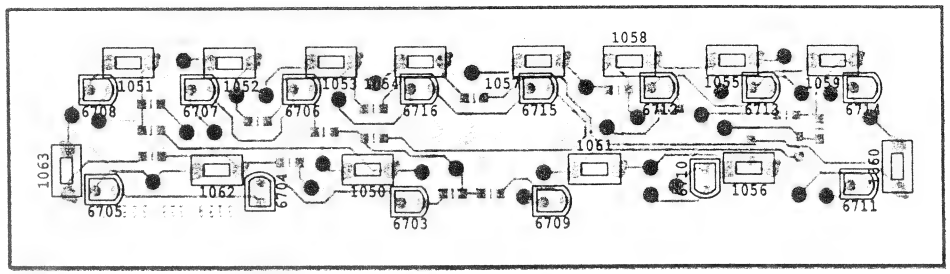

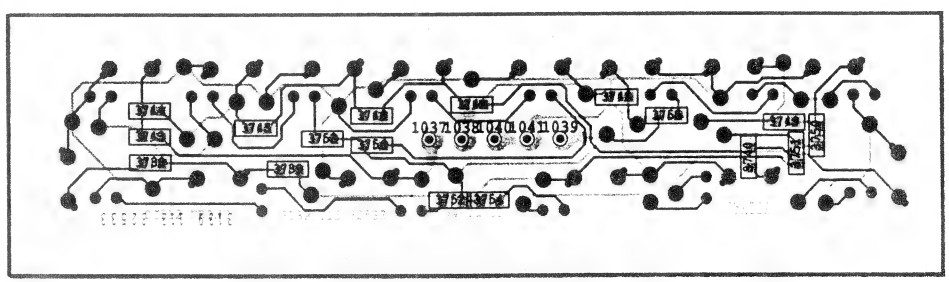

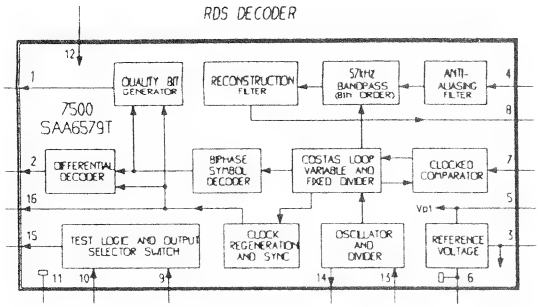
RDS DECODER
7500
SAA6579T
QUALITY BIT GENERATOR
RECONSTRUCTION FILTER
57kHz BANDPASS (8th ORDER)
ANTI-ALIASING FILTER
DIFFERENTIAL DECODER
BIPHASE SYMBOL DECODER
COSTAS LOOP VARIABLE AND FIXED DIVIDER
CLOCKED COMPARATOR
TEST LOGIC AND OUTPUT SELECTOR SWITCH
CLOCK REGENERATION AND SYNC
OSCILLATOR AND DIVIDER
REFERENCE VOLTAGE
Vp1

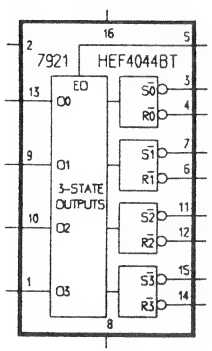
7921
HEF4044BT
EO
O0
O1
O2
O3
3-STATE OUTPUTS

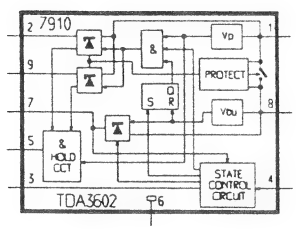
7910
TDA3602
Vp
PROTECT
Vpu
HOLD CCT
STATE CONTROL CIRCUIT

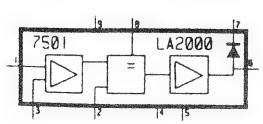
7501
LA2000

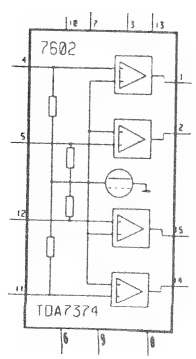
7602
TDA7374

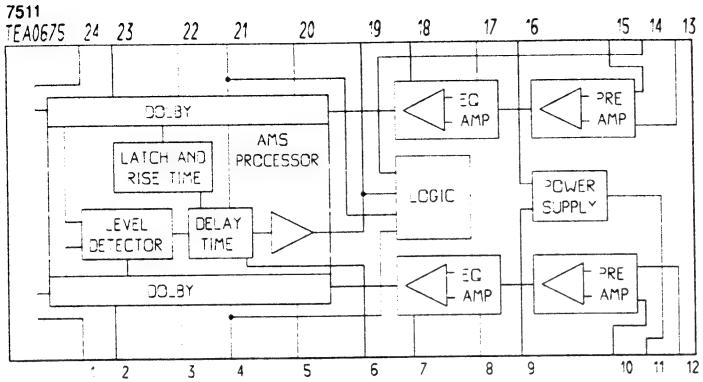

HANDLING CHIP COMPONENTS

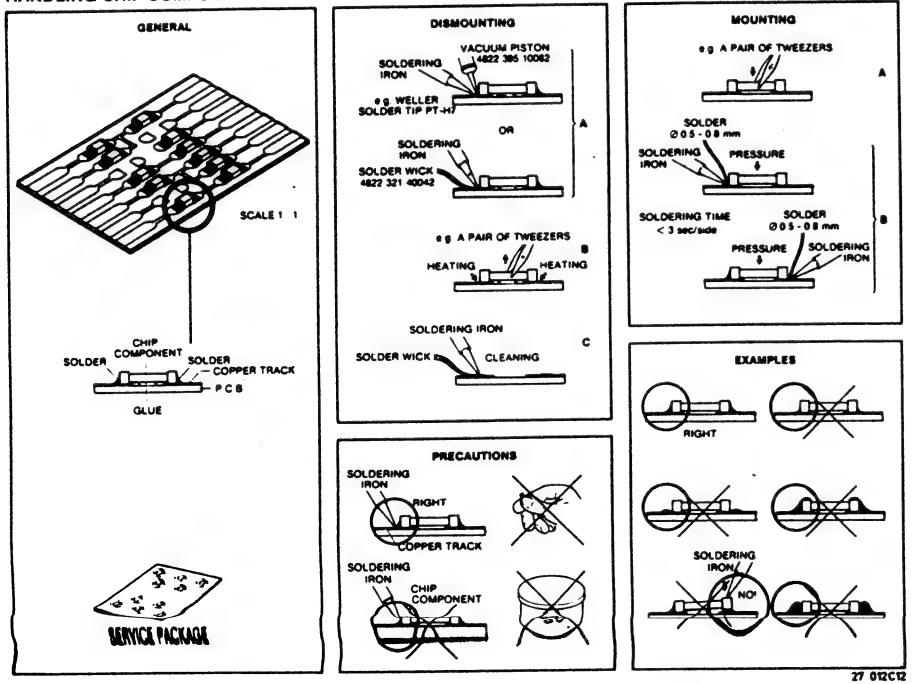

PART 10 : D2B (SUB-PCB)

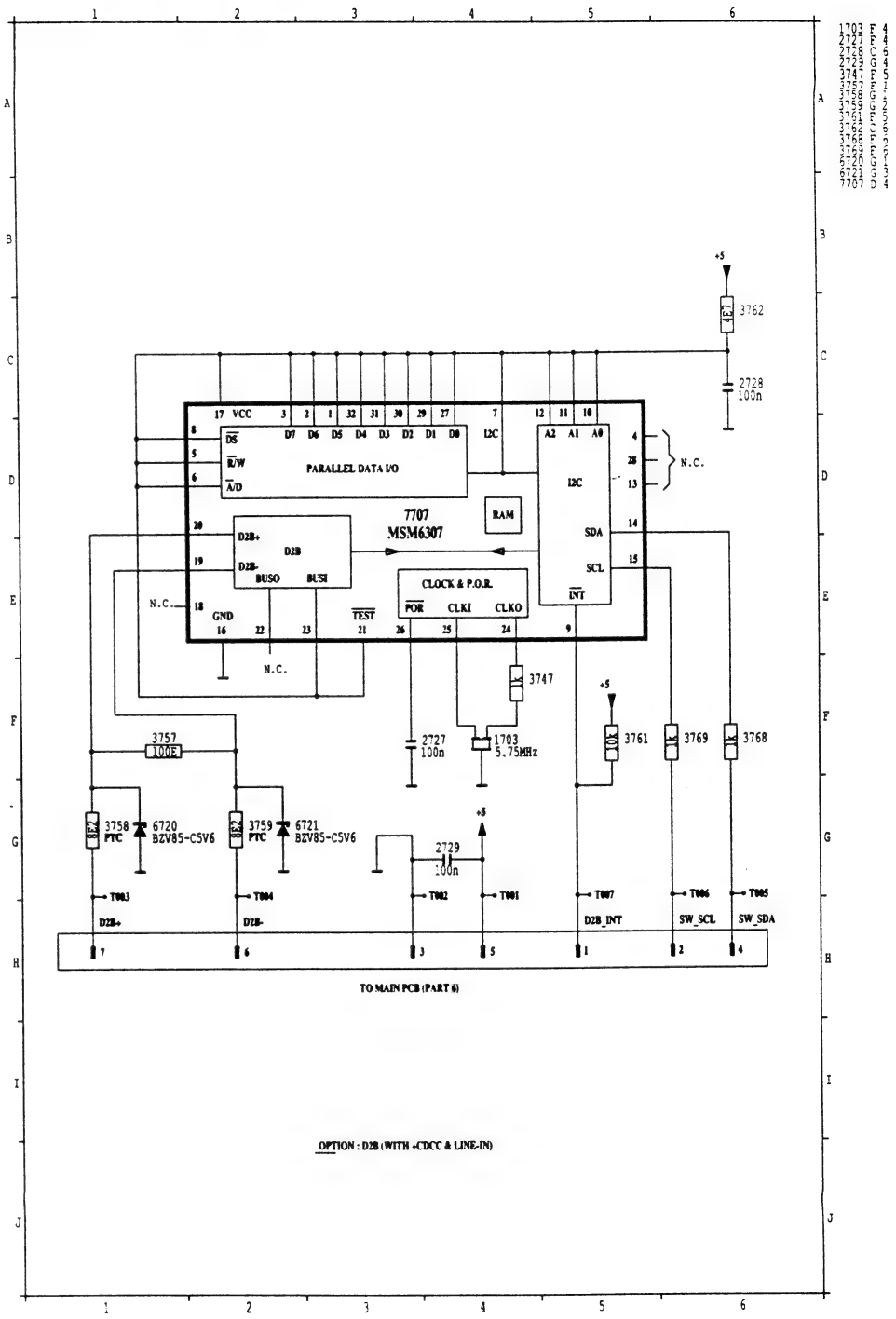

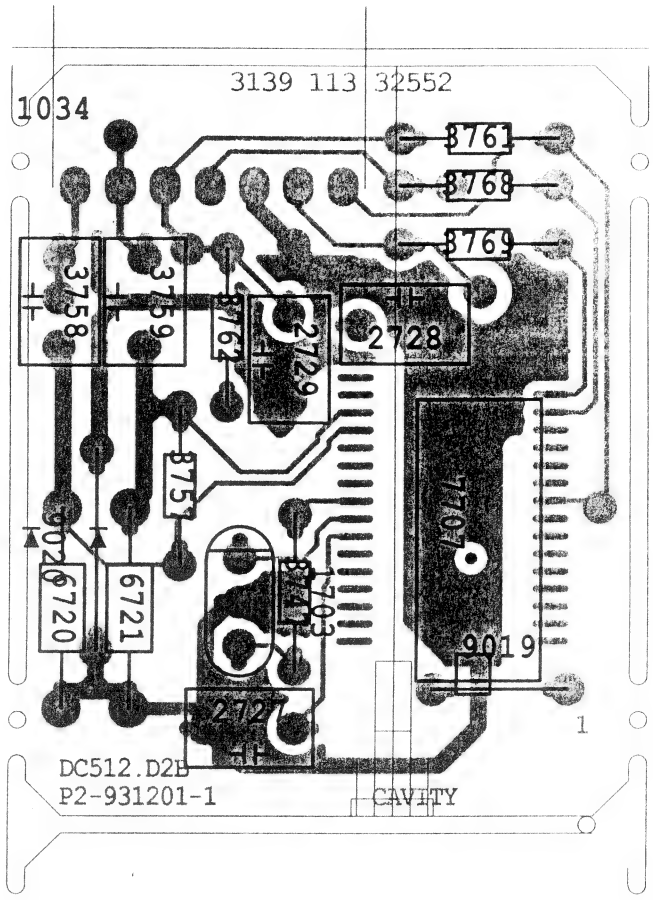
3139 113 32552
1034
3761
3768
3769
3758
3759
3762
2729
2728
8751
9020
6720
6721
8711
1703
1707
9019
2727
1
DC512.D2B
P2-931201-1
CAVITY

EXPLODED VIEW

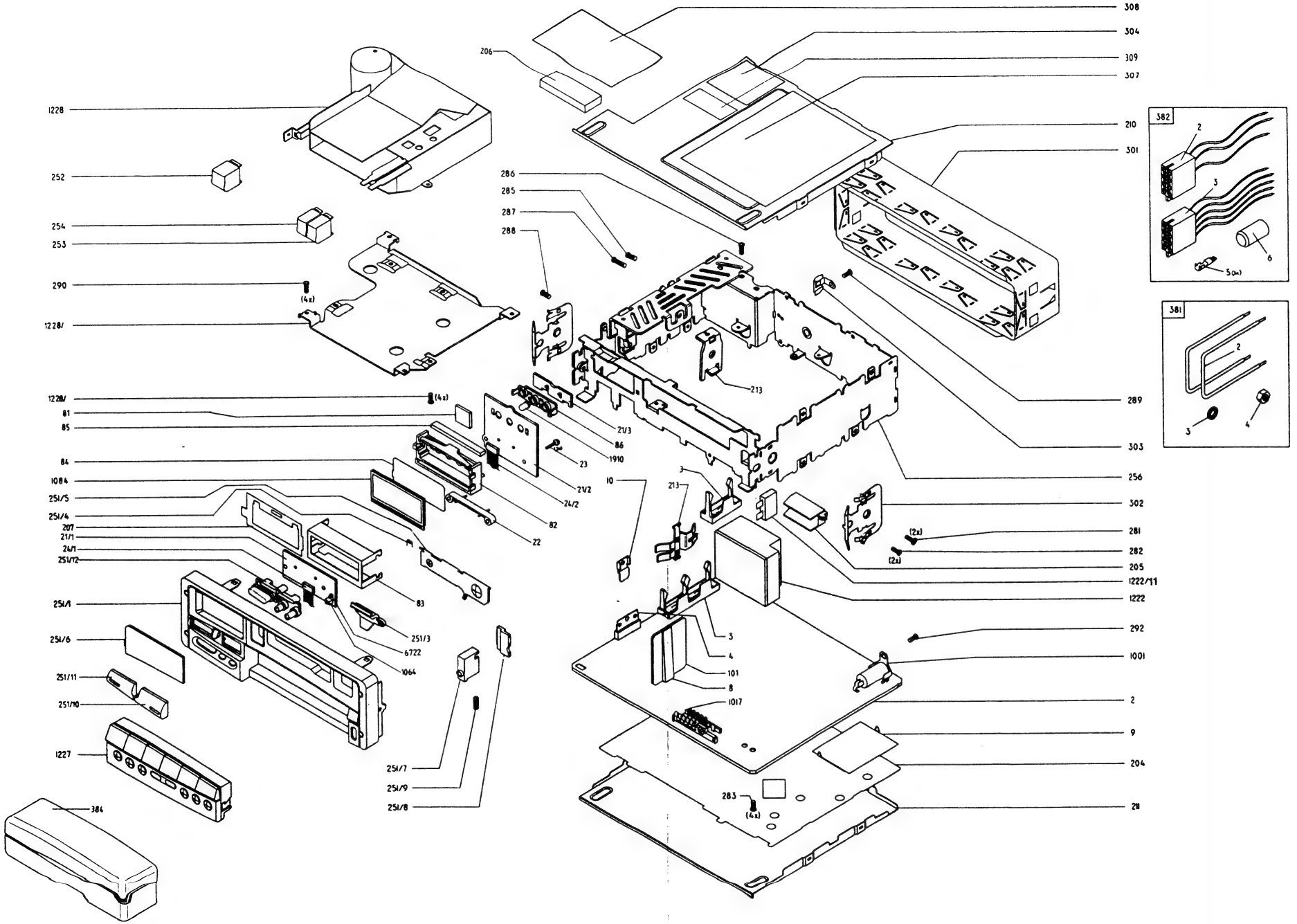

List of Screws

210	SCR PAN TORX TAP BK 2X8
281	SCR CSK TORX TAP M3X6
282	SCR PAN TAP M2.5X6
283	SCR PAN TAP M2.5X6
285	SCR PAN TAP M2.5X6
286	SCR PAN TAP M2.5X6
287	SCR PAN TAP M2.5X6
288	SCR PAN TAP M2.5X6
289	SCR PAN TAP M2.5X6
290	SCR PAN TAP M2.5X6
292	SCR PAN TAP M2.5X6

MECHANICAL AND MISCELLANEOUS PARTSLIST

Only those parts of which the item number is stated below are considered service parts.

205	4822 423 41249	Protection cd changer - DC632/00
252	4822 410 63084	Button eject assy
253	4822 410 63085	Button FFW assy
254	4822 410 63086	Button FRW assy
301	4822 423 90186	Sleeve
302	4822 492 71046	Spring mouting
303	4822 492 71421	Leafspring grounding - DC632/00
384	4822 600 70758	Case detachable unit
251/1	4822 459 50917	Ornamental plate
251/4	4822 492 42582	Spring flap cassette
251/5	4822 443 64396	Flap cassette
251/5	4822 443 64395	Flap cassette assy - DC632/00
251/6	4822 381 11475	Lens assy
251/7	4822 410 63083	Button release
251/8	4822 404 21297	Button release
251/10	4822 410 63645	Button volume up
251/11	4822 410 63646	Button volume down
251/12	4822 410 63647	Button cluster
381/2	4822 404 20437	Bracket mounting
382	4822 321 62722	Mounting material
1222-11	4822 071 21003	Fuse Blade 10A 32V
1227	4822 459 50843	Detachable unit - DC612/00
1227	4822 459 50864	Detachable unit - DC612//80
1227	4822 459 50918	Detachable unit - DC632/00
	4822 736 22333	DFU multi language
	4822 600 70758	Case detachable unit

FRONT PCB

MISCELLANEOUS

1050	4822 276 13454	Tact Switch Red
1051	4822 276 13454	Tact Switch Red
1052	4822 276 13454	Tact Switch Red
1053	4822 276 13454	Tact Switch Red
1054	4822 276 13454	Tact Switch Red
1055	4822 276 13454	Tact Switch Red
1056	4822 276 13454	Tact Switch Red
1057	4822 276 13454	Tact Switch Red
1058	4822 276 13454	Tact Switch Red
1059	4822 276 13454	Tact Switch Red
1060	4822 276 13454	Tact Switch Red
1061	4822 276 13454	Tact Switch Red
1062	4822 276 13454	Tact Switch Red
1063	4822 276 13454	Tact Switch Red

3738	4822 051 20223	22k 5% 0.1W
3739	4822 051 20103	10k 5% 0.1W
3740	4822 051 20223	22k 5% 0.1W
3741	4822 051 20103	10k 5% 0.1W
3743	4822 051 20222	2k2 5% 0.1W
3744	4822 051 20222	2k2 5% 0.1W
3745	4822 051 20332	3k3 5% 0.1W
3746	4822 051 20472	4k7 5% 0.1W
3748	4822 051 20222	2k2 5% 0.1W
3749	4822 051 20222	2k2 5% 0.1W
3750	4822 051 20332	3k3 5% 0.1W
3751	4822 051 20472	4k7 5% 0.1W
3752	4822 051 20821	820Ω 5% 0.1W
3753	4822 051 20821	820Ω 5% 0.1W
3754	4822 051 20821	820Ω 5% 0.1W
3755	4822 051 20821	820Ω 5% 0.1W
3756	4822 051 20102	1k 5% 0.1W

6703	4822 130 82989	LED Orange TH02400
6703	4822 130 83161	LED Green - DC612/80
6704	4822 130 82989	LED Orange TH02400
6704	4822 130 83161	LED Green - DC612/80
6705	4822 130 82989	LED Orange TH02400
6705	4822 130 83161	LED Green - DC612/80
6706	4822 130 82989	LED Orange TH02400
6706	4822 130 83161	LED Green - DC612/80
6707	4822 130 82989	LED Orange TH02400
6707	4822 130 83161	LED Green - DC612/80
6708	4822 130 82989	LED Orange TH02400
6708	4822 130 83161	LED Green - DC612/80
6709	4822 130 82989	LED Orange TH02400

6709	4822 130 83161	LED Green - DC612/80
6710	4822 130 82989	LED Orange TH02400
6710	4822 130 83161	LED Green - DC612/80
6711	4822 130 82989	LED Orange TH02400
6711	4822 130 83161	LED Green - DC612/80
6712	4822 130 82989	LED Orange TH02400
6712	4822 130 83161	LED Green - DC612/80
6713	4822 130 82989	LED Orange TH02400
6713	4822 130 83161	LED Green - DC612/80
6714	4822 130 82989	LED Orange TH02400
6714	4822 130 83161	LED Green - DC612/80
6715	4822 130 82989	LED Orange TH02400
6715	4822 130 83161	LED Green - DC612/80
6716	4822 130 82989	LED Orange TH02400
6716	4822 130 83161	LED Green - DC612/80

MAI

MAIN BOARD

MISCELLANEOUS

1001	4822 267 30883	Socket antenna
1222	4822 290 81701	Connector slide in
1222	4822 290 81641	Connector slide in - DC632/00
1300	4822 242 81503	Filter cer. 450kHz
1301	4822 242 81701	Filter cer. 10.7MHz
1302	4822 242 81701	Filter cer. 10.7MHz
1303	4822 242 81701	Filter cer. 10.7MHz
1500	4822 242 80259	Res. crystal 4.332MHz
1700	4822 242 81856	Resonator cer.11.5MHz
1701	4822 242 72579	Res cer. 4MHz
1704	4822 242 81855	Res. cer. SM 11.5MHz
1705	4822 256 30483	Connector lamp
1902	4822 253 30446	SM Fuse 2A 32V - DC632

⊣⊢

2002	4822 252 60125	Surge protector 200V
2010	5322 122 31944	3.9pF 5% 50V
2016	5322 122 32658	22pF 5% 50V
2100	5322 122 33063	2.2pF 5% 50V
2102	4822 122 33575	220pF 5% 50V
2104	5322 122 34123	1nF 10% 50V
2105	5322 122 34123	1nF 10% 50V
2106	5322 122 34123	1nF 10% 50V
2121	4822 124 41017	10µF 16V
2200	4822 122 33496	100nF 10% 63V
2201	5322 122 34098	10nF 10% 63V
2202	4822 122 33496	100nF 10% 63V
2203	5322 122 33063	2.2pF 5% 50V
2204	5322 126 10343	1.8pF 5% 63V
2205	5322 122 33446	3.3nF 10% 63V
2206	5322 122 33244	8.2pF 5% 50V
2207	4822 126 11692	1µF 50V +80%-20%
2208	5322 122 32531	100pF 5% 50V
2209	5322 122 31946	27pF 5% 63V
2210	4822 122 33496	100nF 10% 63V
2211	5322 122 31946	27pF 5% 63V
2212	5322 122 33446	3.3nF 10% 63V
2213	4822 122 33496	100nF 10% 63V
2214	5322 122 32654	22nF 10% 63V
2215	4822 122 33496	100nF 10% 63V
2217	4822 124 23279	22µF 20% 16V
2218	4822 126 11692	1µF 50V +80%-20%
2219	4822 124 23281	33µF 20% 16V
2220	4822 124 23281	33µF 20% 16V
2221	5322 122 32452	47pF 5% 63V
2223	5322 122 34098	10nF 10% 63V
2224	5322 122 34098	10nF 10% 63V
2227	5322 126 12506	56pF 2% 63V
2228	5322 122 32287	4.7pF 5% 50V
2229	5322 122 32448	10pF 5% 50V

⊣⊢

2230	4822 126 11692	1µF 50V +80%-20%
2231	5322 122 32448	10pF 5% 50V
2232	5322 122 32448	10pF 5% 50V
2233	5322 122 32967	5.6pF 10% 63V
2249	4822 124 80453	100µF 20% 10V
2272	5322 122 32654	22nF 10% 63V
2273	4822 126 11692	1µF 50V +80%-20%
2300	4822 126 11692	1µF 50V +80%-20%
2301	5322 122 32654	22nF 10% 63V
2302	4822 122 33496	100nF 10% 63V
2305	4822 122 33496	100nF 10% 63V
2306	4822 122 33496	100nF 10% 63V
2307	4822 122 33496	100nF 10% 63V
2308	4822 122 33496	100nF 10% 63V
2309	5322 122 34098	10nF 10% 63V
2310	5322 122 33446	3.3nF 10% 63V
2311	4822 126 13057	220nF 10% 25V
2312	4822 122 33514	68pF 5% 50V
2313	4822 126 13057	220nF 10% 25V
2314	5322 122 31866	6.8nF 10% 63V
2315	4822 122 33496	100nF 10% 63V
2316	4822 126 13057	220nF 10% 25V
2317	5322 122 31866	6.8nF 10% 63V
2318	5322 122 32654	22nF 10% 63V
2319	4822 122 33496	100nF 10% 63V
2320	4822 122 33496	100nF 10% 63V
2321	4822 122 33496	100nF 10% 63V
2322	4822 126 13057	220nF 10% 25V
2324	4822 126 13057	220nF 10% 25V
2325	5322 122 32654	22nF 10% 63V
2327	4822 124 22646	47µF 20% 16V
2328	4822 124 23279	22µF 20% 16V
2330	4822 122 33496	100nF 10% 63V
2332	4822 124 23281	33µF 20% 16V
2333	5322 122 34098	10nF 10% 63V
2340	5322 122 32448	10pF 5% 50V
2349	5322 122 34098	10nF 10% 63V
2402	5322 122 34098	10nF 10% 63V
2500	5322 122 31863	330pF 5% 50V
2501	5322 122 32268	470pF 10% 50V
2502	5322 126 10223	4.7nF 10% 63V
2503	4822 124 23504	2.2µF 20% 50V
2504	5322 122 32452	47pF 5% 63V
2505	4822 122 33515	82pF 5% 63V
2506	4822 126 13057	220nF 10% 25V
2507	5322 122 34123	1nF 10% 50V
2508	4822 124 23504	2.2µF 20% 50V
2509	4822 124 23504	2.2µF 20% 50V
2510	4822 126 13196	100nF 10% 25V
2511	4822 126 13196	100nF 10% 25V
2512	5322 122 33538	150pF 2% 63V
2513	5322 122 33538	150pF 2% 63V

⊣⊢

2514	4822 126 13196	100nF 10% 25V
2515	5322 122 33538	150pF 2% 63V
2516	5322 122 33538	150pF 2% 63V
2518	5322 122 34123	1nF 10% 50V
2520	4822 122 32636	390pF 5% 50V
2521	5322 122 34123	1nF 10% 50V
2522	5322 122 32654	22nF 10% 63V
2523	5322 122 32448	10pF 5% 50V
2527	5322 122 32268	470pF 10% 50V
2530	5322 122 32268	470pF 10% 50V
2531	4822 124 41017	10µF 16V
2532	4822 124 41017	10µF 16V
2533	4822 124 80453	100µF 20% 10V
2534	4822 124 80453	100µF 20% 10V
2535	4822 124 41017	10µF 16V
2537	5322 122 34098	10nF 10% 63V
2538	5322 122 34098	10nF 10% 63V
2539	4822 126 13188	15nF 5% 63V - DC632/00
2540	4822 126 13196	100nF 10% 25V - DC632/00
2541	4822 126 13196	100nF 10% 25V - DC632/00
2542	5322 121 42661	330nF 5% 63V - DC632/00
2542	5322 121 42661	330nF 5% 63V - DC632/00
2543	5322 121 42661	330nF 5% 63V - DC632/00
2544	5322 126 12698	4nF 72% - DC632/00
2545	5322 126 12698	4nF 72% - DC632/00
2546	4822 126 13188	15nF 5% 63V - DC632/00
2549	4822 126 13196	100nF 10% 25V - DC632/00
2553	4822 126 13196	100nF 10% 25V
2554	5322 122 34098	10nF 10% 63V
2555	5322 122 31865	1.5nF 10% 63V
2556	4822 124 23504	2.2µF 20% 50V
2557	5322 122 31865	1.5nF 10% 63V
2558	5322 126 10223	4.7nF 10% 63V
2559	5322 122 32654	22nF 10% 63V
2600	4822 124 23282	1µF 20% 50V
2601	4822 124 23282	1µF 20% 50V
2602	4822 124 23282	1µF 20% 50V
2603	4822 124 23282	1µF 20% 50V
2604	5322 126 10223	4.7nF 10% 63V
2605	5322 126 10223	4.7nF 10% 63V
2606	5322 126 10223	4.7nF 10% 63V
2607	5322 126 10223	4.7nF 10% 63V
2608	4822 124 80056	47µF 20% 16V
2611	4822 124 80056	47µF 20% 16V
2612	4822 126 13196	100nF 10% 25V
2613	4822 126 13196	100nF 10% 25V
2620	4822 124 23281	33µF 20% 16V
2651	5322 126 10223	4.7nF 10% 63V
2653	5322 126 10223	4.7nF 10% 63V
2655	4822 124 80769	2200µF 20% 16V
2700	4822 124 22646	47µF 20% 16V
2701	4822 126 13343	47nF 10% 25V

⊣⊢

2702	5322 122 34123	1nF 10% 50V
2703	5322 122 32268	470pF 10% 50V
2704	4822 126 13343	47nF 10% 25V
2705	5322 122 32452	47pF 5% 63V
2706	5322 122 33869	15pF 5% 63V
2707	4822 124 41017	10µF 16V
2708	4822 126 13196	100nF 10% 25V
2709	4822 126 13196	100nF 10% 25V
2710	5322 122 34123	1nF 10% 50V
2711	4822 126 13196	100nF 10% 25V
2712	5322 122 32658	22pF 5% 50V
2713	4822 122 33515	82pF 5% 63V
2714	5322 126 10223	4.7nF 10% 63V
2715	4822 122 33575	220pF 5% 50V
2716	4822 122 33575	220pF 5% 50V
2717	4822 122 33575	220pF 5% 50V
2718	4822 126 13196	100nF 10% 25V
2720	4822 126 13196	100nF 10% 25V
2721	5322 122 32654	22nF 10% 63V
2722	4822 126 13057	220nF 10% 25V
2723	5322 122 32531	100pF 5% 50V
2724	5322 122 32531	100pF 5% 50V
2726	5322 122 32531	100pF 5% 50V
2730	4822 126 13196	100nF 10% 25V
2731	4822 126 13057	220nF 10% 25V
2733	5322 122 33869	15pF 5% 63V
2734	5322 122 33869	15pF 5% 63V
2801	4822 126 13196	100nF 10% 25V
2802	4822 126 13196	100nF 10% 25V
2805	4822 126 13196	100nF 10% 25V
2806	4822 124 22646	47µF 20% 16V - DC632/00
2807	4822 126 13057	220nF 10% 25V - DC632/00
2808	4822 126 13057	220nF 10% 25V - DC632/00
2809	4822 124 23279	22µF 20% 16V - DC632/00
2810	4822 126 13196	100nF 10% 25V - DC632/00
2811	5322 122 32531	100pF 5% 50V
2812	5322 122 32654	22nF 10% 63V
2813	4822 124 80453	100µF 20% 10V
2814	4822 126 13196	100nF 10% 25V
2816	4822 122 33127	2.2nF 10% 63V
2817	4822 126 13057	220nF 10% 25V
2818	4822 126 13343	47nF 10% 25V
2819	4822 122 32646	5.6nF 10% 50V
2820	4822 124 22646	47µF 20% 16V
2821	4822 126 13196	100nF 10% 25V
2823	4822 122 33127	2.2nF 10% 63V
2824	4822 126 13057	220nF 10% 25V
2825	4822 126 13343	47nF 10% 25V
2826	4822 122 32646	5.6nF 10% 50V
2827	5322 122 34098	10nF 10% 63V
2850	4822 124 41017	10µF 16V - DC632/00
2851	4822 124 41017	10µF 16V - DC632/00

2852	4822 124 41017	10µF 16V - DC632/00
2853	4822 124 41017	10µF 16V - DC632/00
2900	5322 122 34123	1nF 10% 50V
2902	4822 124 80769	2200µF 20% 16V
2904	4822 124 80056	47µF 20% 16V
2905	4822 126 13196	100nF 10% 25V
2906	4822 126 13196	100nF 10% 25V
2910	5322 122 34123	1nF 10% 50V
2911	4822 126 13196	100nF 10% 25V
2912	5322 122 34123	1nF 10% 50V
2913	4822 126 13196	100nF 10% 25V
2914	4822 124 80766	1000µF 20% 25V
2915	4822 124 80056	47µF 20% 16V
2916	4822 124 80056	47µF 20% 16V
2917	4822 124 80056	47µF 20% 16V
2919	4822 126 13343	47nF 10% 25V
2920	4822 124 41017	10µF 16V
2921	5322 122 33446	3.3nF 10% 63V
2928	5322 122 34098	10nF 10% 63V
2930	5322 122 32654	22nF 10% 63V
2933	4822 124 22646	47µF 20% 16V
2935	5322 122 34098	10nF 10% 63V
2936	5322 122 34098	10nF 10% 63V

3000	4822 051 20102	1k 5% 0.1W
3001	4822 051 20102	1k 5% 0.1W
3003	4822 051 20008	0Ω0 Jumper
3101	4822 051 20473	47k 5% 0.1W
3102	4822 051 20471	470Ω 5% 0.1W
3103	4822 051 20229	22Ω 5% 0.1W
3104	4822 051 20478	4Ω7 5% 0.1W
3105	4822 051 20229	22Ω 5% 0.1W
3106	4822 051 20478	4Ω7 5% 0.1W
3107	4822 051 20225	2M2 5% 0.1W
3108	4822 051 20104	100k 5% 0.1W
3110	4822 051 20229	22Ω 5% 0.1W
3200	4822 051 20392	3k9 5% 0.1W
3201	4822 051 20222	2k2 5% 0.1W
3202	4822 051 20103	10k 5% 0.1W
3203	4822 051 20221	220Ω 5% 0.1W
3204	4822 051 20471	470Ω 5% 0.1W
3205	4822 051 20471	470Ω 5% 0.1W
3206	4822 051 20101	100Ω 5% 0.1W
3207	4822 051 20479	47k 5% 0.1W
3208	4822 051 20103	10k 5% 0.1W
3209	4822 051 20103	10k 5% 0.1W
3210	4822 051 20225	2M2 5% 0.1W
3211	4822 051 20479	47Ω 5% 0.1W
3212	4822 051 20229	22Ω 5% 0.1W

3213	4822 051 20478	4Ω7 5% 0.1W
3270	4822 051 20471	470Ω 5% 0.1W
3290	4822 051 20224	220k 5% 0.1W
3292	4822 051 20229	22Ω 5% 0.1W
3300	4822 051 20123	12k 5% 0.1W
3301	4822 051 20225	2M2 5% 0.1W
3302	4822 051 20333	33k 5% 0.1W
3303	4822 100 20166	10k 30%LIN 0.1W
3307	4822 051 20432	4k3 5% 0.1W
3308	4822 051 20224	220k 5% 0.1W
3309	4822 117 11149	82k 1% 0.1W
3310	4822 051 20684	680k 5% 0.1W
3313	4822 051 20124	120k 5% 0.1W
3314	4822 051 20564	560k 5% 0.1W
3315	4822 051 20684	680k 5% 0.1W
3316	4822 051 20225	2M2 5% 0.1W
3317	4822 051 20273	27k 5% 0.1W
3318	4822 051 20391	390Ω 5% 0.1W
3320	4822 100 11163	100k 30%LIN 0.1W
3321	4822 100 11163	100k 30%LIN 0.1W
3323	4822 051 20391	390Ω 5% 0.1W
3324	4822 051 20272	2k7 5% 0.1W
3325	4822 051 20101	100Ω 5% 0.1W
3326	4822 051 20391	390Ω 5% 0.1W
3327	4822 051 20681	680Ω 5% 0.1W
3341	4822 051 20479	47Ω 5% 0.1W
3348	4822 051 20681	680Ω 5% 0.1W
3349	4822 051 20223	22k 5% 0.1W
3350	4822 051 20102	1k 5% 0.1W
3351	4822 051 20333	33k 5% 0.1W
3409	4822 051 20473	47k 5% 0.1W
3410	4822 051 20103	10k 5% 0.1W
3411	4822 051 20472	4k7 5% 0.1W
3412	4822 051 20104	100k 5% 0.1W
3500	4822 051 20104	100k 5% 0.1W
3501	4822 051 20229	22Ω 5% 0.1W
3502	4822 051 20222	2k2 5% 0.1W
3503	4822 051 20104	100k 5% 0.1W
3504	4822 051 20683	68k 5% 0.1W
3505	4822 051 20223	22k 5% 0.1W
3506	4822 051 20334	330k 5% 0.1W
3507	4822 051 20229	22Ω 5% 0.1W
3508	4822 051 20103	10k 5% 0.1W
3509	4822 051 20393	39k 5% 0.1W
3510	4822 051 20332	3k3 5% 0.1W
3511	4822 051 20332	3k3 5% 0.1W
3512	4822 051 20103	10k 5% 0.1W
3513	4822 051 20393	39k 5% 0.1W
3514	4822 051 20103	10k 5% 0.1W
3515	4822 051 20393	39k 5% 0.1W
3516	4822 051 20103	10k 5% 0.1W
3517	4822 051 20393	39k 5% 0.1W

3518	4822 051 20008	0Ω0 Jumper - DC632/00
3519	4822 051 20393	39k 5% 0.1W
3520	4822 051 20223	22k 5% 0.1W - DC632/00
3521	4822 051 20224	220k 5% 0.1W
3522	4822 051 20104	100k 5% 0.1W
3533	4822 051 20103	10k 5% 0.1W - DC612
3523	4822 051 20103	10k 5% 0.1W - DC632/00
3524	4822 116 81437	5Ω6 5% 0.5W
3525	4822 051 20102	1k 5% 0.1W
3526	4822 116 81437	5Ω6 5% 0.5W
3527	4822 116 52244	15k 5% 0.5W
3528	4822 051 20223	22k 5% 0.1W
3529	4822 051 20103	10k 5% 0.1W
3530	4822 051 20222	2k2 5% 0.1W
3531	4822 051 20473	47k 5% 0.1W
3532	4822 051 20222	2k2 5% 0.1W
3534	4822 051 20184	180k 5% 0.1W - DC632/00
3535	4822 051 20471	470Ω 5% 0.1W
3536	4822 116 81437	5Ω6 5% 0.5W
3538	4822 051 20471	470Ω 5% 0.1W - DC632/00
3539	4822 051 20471	470Ω 5% 0.1W - DC632/00
3540	4822 100 11681	1k 30% 0.1W - DC632/00
3541	4822 051 20822	8k2 5% 0.1W
3542	4822 051 20334	330k 5% 0.1W
3543	4822 100 11681	1k 30% 0.1W - DC632/00
3544	4822 051 20822	8k2 5% 0.1W
3545	4822 051 20334	330k 5% 0.1W
3548	4822 051 20103	10k 5% 0.1W - DC632/00
3549	4822 117 11139	1k5 1% 0.1W - DC632/00
3550	4822 051 20153	15k 5% 0.1W - DC632/00
3551	4822 051 20684	680k 5% 0.1W - DC632/00
3552	4822 051 20473	47k 5% 0.1W - DC632/00
3553	4822 117 10507	24k 1% 0.1W - DC632/00
3554	4822 117 10507	24k 1% 0.1W - DC632/00
3555	4822 051 20184	180k 5% 0.1W - DC632/00
3556	4822 051 20184	180k 5% 0.1W - DC632/00
3557	4822 051 20274	270k 5% 0.1W - DC632/00
3558	4822 051 20274	270k 5% 0.1W - DC632/00
3559	4822 117 11139	1k5 1% 0.1W - DC632/00
3560	4822 116 52176	10Ω 5% 0.5W
3562	4822 051 20153	15k 5% 0.1W
3563	4822 051 20102	1k 5% 0.1W - DC612
3564	4822 051 20102	1k 5% 0.1W - DC612
3565	4822 051 20473	47k 5% 0.1W - DC632/00
3566	4822 116 83863	1k 5% 0.5W - DC632/00
3568	4822 051 20683	68k 5% 0.1W
3569	4822 051 20103	10k 5% 0.1W
3570	4822 051 20471	470Ω 5% 0.1W
3571	4822 051 20332	3k3 5% 0.1W
3572	4822 051 20472	4k7 5% 0.1W
3573	4822 117 11139	1k5 1% 0.1W - DC612
3575	4822 051 20478	4Ω7 5% 0.1W - DC632/00

3576	4822 051 20473	47k 5% 0.1W - DC632/00
3577	4822 051 20822	8k2 5% 0.1W
3581	4822 051 20153	15k 5% 0.1W - DC612
3578	4822 051 20101	100Ω 5% 0.1W - DC632/00
3579	4822 051 20473	47k 5% 0.1W - DC632/00
3580	4822 116 52284	47k 5% 0.5W - DC632/00
3605	4822 051 20102	1k 5% 0.1W
3607	4822 051 20223	22k 5% 0.1W
3608	4822 051 20102	1k 5% 0.1W
3609	4822 051 20102	1k 5% 0.1W
3610	4822 051 20102	1k 5% 0.1W
3611	4822 051 20102	1k 5% 0.1W
3617	4822 051 20008	0Ω0 Jumper
3619	4822 051 20008	0Ω0 Jumper
3620	4822 051 20683	68k 5% 0.1W
3621	4822 051 20683	68k 5% 0.1W
3622	4822 051 20472	4k7 5% 0.1W
3623	4822 051 20682	6k8 5% 0.1W
3624	4822 051 20153	15k 5% 0.1W
3629	4822 051 20472	4k7 5% 0.1W
3630	4822 116 40254	PTC 330Ω 16V
3650	4822 051 20102	1k 5% 0.1W
3651	4822 051 20102	1k 5% 0.1W
3702	4822 051 20473	47k 5% 0.1W
3704	4822 051 20101	100Ω 5% 0.1W
3705	4822 051 20102	1k 5% 0.1W
3706	4822 051 20102	1k 5% 0.1W
3708	4822 051 20478	4Ω7 5% 0.1W
3710	4822 051 20102	1k 5% 0.1W
3711	4822 051 20102	1k 5% 0.1W
3715	4822 051 20478	4Ω7 5% 0.1W
3717	4822 051 20103	10k 5% 0.1W
3718	4822 051 20103	10k 5% 0.1W
3719	4822 051 20682	6k8 5% 0.1W
3720	4822 051 20682	6k8 5% 0.1W
3722	4822 051 20103	10k 5% 0.1W
3723	4822 051 20101	100Ω 5% 0.1W
3724	4822 051 20225	2M2 5% 0.1W
3725	4822 051 20222	2k2 5% 0.1W
3728	4822 051 20153	15k 5% 0.1W
3729	4822 051 20153	15k 5% 0.1W
3731	4822 051 20104	100k 5% 0.1W
3732	4822 051 20104	100k 5% 0.1W
3733	4822 051 20103	10k 5% 0.1W
3734	4822 051 20103	10k 5% 0.1W
3735	4822 051 20103	10k 5% 0.1W
3736	4822 051 20104	100k 5% 0.1W
3767	4822 051 20478	4Ω7 5% 0.1W
3769	4822 051 20103	10k 5% 0.1W
3770	4822 051 20102	1k 5% 0.1W
3771	4822 051 20103	10k 5% 0.1W
3773	4822 051 20102	1k 5% 0.1W

MAIN BOARD

3800	4822 051 20105	1M 5% 0.1W
3817	4822 051 20393	39k 5% 0.1W
3818	4822 051 20473	47k 5% 0.1W
3819	4822 051 20222	2k2 5% 0.1W
3820	4822 051 20473	47k 5% 0.1W
3821	4822 051 20222	2k2 5% 0.1W
3822	4822 051 20102	1k 5% 0.1W
3823	4822 051 20102	1k 5% 0.1W
3824	4822 051 20393	39k 5% 0.1W
3826	4822 051 20104	100k 5% 0.1W
3829	4822 051 20332	3k3 5% 0.1W
3830	4822 051 20332	3k3 5% 0.1W - DC632/00
3850	4822 051 20103	10k 5% 0.1W - DC632/00
3851	4822 051 20103	10k 5% 0.1W - DC632/00
3852	4822 051 20103	10k 5% 0.1W - DC632/00
3853	4822 051 20103	10k 5% 0.1W - DC632/00
3902	4822 051 20104	100k 5% 0.1W
3903	4822 051 20472	4k7 5% 0.1W
3904	4822 116 83863	1k 5% 0.5W
3905	4822 116 83863	1k 5% 0.5W
3906	4822 116 83863	1k 5% 0.5W
3907	4822 051 20102	1k 5% 0.1W
3916	4822 051 20103	10k 5% 0.1W
3918	4822 051 20473	47k 5% 0.1W
3919	4822 051 20223	22k 5% 0.1W
3920	4822 051 20222	2k2 5% 0.1W
3921	4822 051 20224	220k 5% 0.1W
3922	4822 051 20104	100k 5% 0.1W
3924	4822 051 20473	47k 5% 0.1W
3928	4822 051 20103	10k 5% 0.1W
3929	4822 116 52285	470k 5% 0.5W
3930	4822 051 20104	100k 5% 0.1W
3931	4822 051 20473	47k 5% 0.1W
3932	4822 051 20104	100k 5% 0.1W
3933	4822 051 20224	220k 5% 0.1W
3934	4822 051 20478	4Ω7 5% 0.1W
3937	4822 051 20182	1k8 5% 0.1W
3938	4822 051 20102	1k 5% 0.1W
3939	4822 051 20182	1k8 5% 0.1W
3945	4822 051 20472	4k7 5% 0.1W
3949	4822 051 20102	1k 5% 0.1W
3952	4822 051 20101	100Ω 5% 0.1W
3955	4822 051 20473	47k 5% 0.1W
3956	4822 051 20103	10k 5% 0.1W
3960	4822 116 40216	PTC 4Ω7 56V 20%
3962	4822 051 20182	1k8 5% 0.1W
3984	4822 051 20008	0Ω0 Jumper

4300	4822 242 81698	Res crystal 61.50MHz

5100	4822 157 71482	Ind. Var. 7MM 57MHz
5200	4822 157 62593	Ind. Fxd. 220µH 1%
5201	4822 157 71059	Ind Var 7MM 100MHz
5202	4822 157 52983	Ind Fxd 22µH 1%
5203	4822 157 53473	Ind Fxd 1000µH 1%
5205	4822 157 52983	Ind Fxd 22µH 1%
5206	4822 157 71057	Ind Var 47000µH 6%
5207	4822 157 71058	Filter Var KZV-353
5208	4822 156 21722	Ind Var 7CGL 10.7MHz
5209	4822 157 71055	Ind Var 72.2MHz
5210	4822 157 71055	Ind Var 72.2MHz
5211	4822 156 21721	Ind LAL02 2.2µH 1%
5212	4822 156 21719	Ind LAL02 1.5µH 1%
5301	4822 156 21724	Ind Var 7CGL 450kHz
5302	4822 157 71061	Ind Var 10.7MHz
5700	4822 157 50961	Ind LAL04 22µH 1%
5701	4822 157 60122	Ind LAL02 4.7µH 1%
5702	4822 157 71206	Ind Fxd SM 100MHz
5703	4822 157 60122	Ind LAL02 4.7µH 1%
5704	4822 157 71206	Ind Fxd SM 100MHz
5705	4822 157 71206	Ind Fxd SM 100MHz
5900	4822 157 70935	Coil assy
5903	4822 157 50961	Ind LAL04 22µH 1%

6100	4822 130 81711	SM DIODE 1SV172
6102	4822 130 81643	BB804
6200	5322 130 34337	BAV99
6401	5322 130 31928	BAS16
6500	5322 130 34337	BAV99
6507	5322 130 34337	BAV99
6702	4822 130 82996	LED
6705	5322 130 80255	BZX84-C8V2
6706	5322 130 80255	BZX84-C8V2
6801	5322 130 31928	BAS16
6901	5322 130 30684	1N4002GPE
6905	4822 130 31024	BZX79-C18
6906	4822 130 30621	1N4148
6907	5322 130 30684	1N4002GPE
6908	5322 130 80255	BZX84-C8V2
6909	5322 130 31928	BAS16
6910	5322 130 30684	1N4002GPE
6911	4822 130 81624	1.5KE27
6912	5322 130 30684	1N4002GPE
6913	5322 130 30684	1N4002GPE
6915	4822 130 34173	BZX79-C5V6
6916	4822 130 34173	BZX79-C5V6
6917	5322 130 34337	BAV99
6918	5322 130 31928	BAS16
6919	5322 130 31928	BAS16

6922	4822 130 82989	LED Orange TH02400
6922	4822 130 83161	LED Green - DC612/80

7100	4822 130 63545	BF999
7200	4822 130 83614	BB135
7201	4822 130 63534	PMBFJ309
7202	4822 209 33168	TEA6811V/C2/R1
7300	4822 209 33167	TEA6821T/V2
7301	4822 130 60887	BF840
7403	4822 130 42705	BC847
7500	4822 209 31981	SAA6579T/V1
7501	4822 209 83159	LA2000
7502	4822 209 32742	TL074IN
7503	4822 130 42705	BC847
7505	4822 130 42615	BC817-40 - DC632/00
7506	4822 130 44283	BC636
7510	4822 209 33237	TEA0677T/V1 - DC612
7507	4822 130 42705	BC847 - DC632/00
7508	5322 130 60508	BC857B - DC632/00
7509	4822 130 42705	BC847 - DC632/00
7511	4822 209 32744	TEA0675T/V1 - DC632/00
7513	4822 130 42705	BC847 - DC632/00
7514	4822 130 42705	BC847 - DC632/00
7602	4822 209 31132	TDA7374V
7603	4822 209 31132	TDA7374V
7606	4822 130 42705	BC847
7607	5322 130 60508	BC857B
7700	4822 209 90075	P83CE558EFB/034 F4+AS-R2.0
7702	4822 209 90074	P83C528FFB/109 F4+AS-R2.0
7703	5322 130 60508	BC857B
7704	4822 900 10595	ST24C16CB6-DC612
7704	4822 900 10596	ST24C16CB6-DC632
7708	5322 209 11461	HEF4521BT - DC632/00
7708	5322 209 11461	HEF4521BT
7800	4822 209 32745	TEA6320/V1
7801	4822 209 33985	TDA8579T/N1 - DC632/00
7803	4822 130 42705	BC847
7804	5322 130 60508	BC857B
7850	4822 130 63747	DTC314TK - DC632/00
7851	4822 130 63747	DTC314TK - DC632/00
7852	4822 130 63747	DTC314TK - DC632/00
7853	4822 130 63747	DTC314TK - DC632/00
7904	4822 130 40995	BD438/366B
7905	4822 130 42705	BC847
7909	4822 130 42705	BC847
7910	4822 209 33029	TDA3602/N3
7913	5322 130 60508	BC857B

7918	4822 130 42705	BC847
7919	4822 130 40982	BD433
7919	4822 130 63539	BD241C - DC612/80
7921	4822 209 12628	HEF4044BT

LCD/KEYBOARD BOARD

MISCELLANEOUS

1064	4822 276 13454	Tact Switch 50MA 12V
1065	4822 276 13454	Tact Switch 50MA 12V
1066	4822 276 13454	Tact Switch 50MA 12V
1067	4822 276 13454	Tact Switch 50MA 12V
1068	4822 276 13454	Tact Switch 50MA 12V
1704	4822 130 91453	LCD LPH6260-1
1910	4822 134 41212	Lamp assy Orange
1910	4822 134 41215	Lamp assy - DC612/80
1911	4822 134 41212	Lamp assy Orange
1911	4822 134 41215	Lamp assy - DC612/80
1912	4822 134 41212	Lamp assy Orange
1912	4822 134 41215	Lamp assy - DC612/80

2738	4822 126 13196	100nF 10% 25V

3757	4822 051 20182	1k8 5% 0.1W - DC612/80
3757	4822 051 20272	2k7 5% 0.1W
3758	4822 051 20182	1k8 5% 0.1W - DC612/80
3758	4822 051 20272	2k7 5% 0.1W
3759	4822 051 20182	1k8 5% 0.1W - DC612/80
3759	4822 051 20272	2k7 5% 0.1W
3760	4822 051 20182	1k8 5% 0.1W - DC612/80
3760	4822 051 20272	2k7 5% 0.1W
3761	4822 051 20182	1k8 5% 0.1W - DC612/80
3761	4822 051 20272	2k7 5% 0.1W
3762	4822 051 20182	1k8 5% 0.1W - DC612/80
3762	4822 051 20272	2k7 5% 0.1W
3763	4822 051 20332	3k3 5% 0.1W
3763	4822 051 20182	1k8 5% 0.1W - DC612/80
3764	4822 051 20332	3k3 5% 0.1W
3764	4822 051 20182	1k8 5% 0.1W - DC612/80
3765	4822 051 20332	3k3 5% 0.1W
3765	4822 051 20182	1k8 5% 0.1W - DC612/80
3766	4822 051 20123	12k 5% 0.1W
3766	4822 051 20472	4k7 5% 0.1W - DC612/80
3767	4822 051 20103	10k 5% 0.1W
3767	4822 051 20822	8k2 5% 0.1W - DC612/80
3768	4822 051 20223	22k 5% 0.1W
3768	4822 051 20333	33k 5% 0.1W - DC612/80
3769	4822 051 20103	10k 5% 0.1W
3770	4822 051 20102	1k 5% 0.1W
3771	4822 051 20184	180k 5% 0.1W
3790	4822 051 20008	0Ω0 Jumper - DC612/80
3791	4822 051 20008	0Ω0 Jumper - DC612/80

6722	4822 130 82989	LED Orange
6722	4822 130 83161	LED Green - DC612/80
6723	4822 130 82989	LED Orange
6723	4822 130 83161	LED Green - DC612/80
6724	4822 130 82989	LED Orange
6724	4822 130 83161	LED Green - DC612/80
6725	4822 130 82989	LED Orange
6725	4822 130 83161	LED Green - DC612/80
6726	4822 130 82989	LED Orange
6726	4822 130 83161	LED Green - DC612/80

7711	5322 209 11129	PCF8576T
7712	5322 209 11129	PCF8576T - DC612/80

D²B BOARD (DC632 ONLY)

MISCELLANEOUS

1703	4822 242 81659	CST5.75MHz

2727	5322 121 42386	100nF 5% 63V
2728	5322 121 42386	100nF 5% 63V
2729	5322 121 42386	100nF 5% 63V

3747	4822 116 83863	1k 5% 0.5W
3757	4822 116 52175	100Ω 5% 0.5W
3758	4822 116 40221	8Ω2 20%
3759	4822 116 40221	8Ω2 20%
3761	4822 116 83864	10k 5% 0.5W
3762	4822 116 52176	10Ω 5% 0.5W
3768	4822 116 83863	1k 5% 0.5W
3769	4822 116 83863	1k 5% 0.5W

6720	4822 130 32904	BZV85-C5V6
6721	4822 130 32904	BZV85-C5V6

7707	4822 209 32743	MSM6307GS-VK